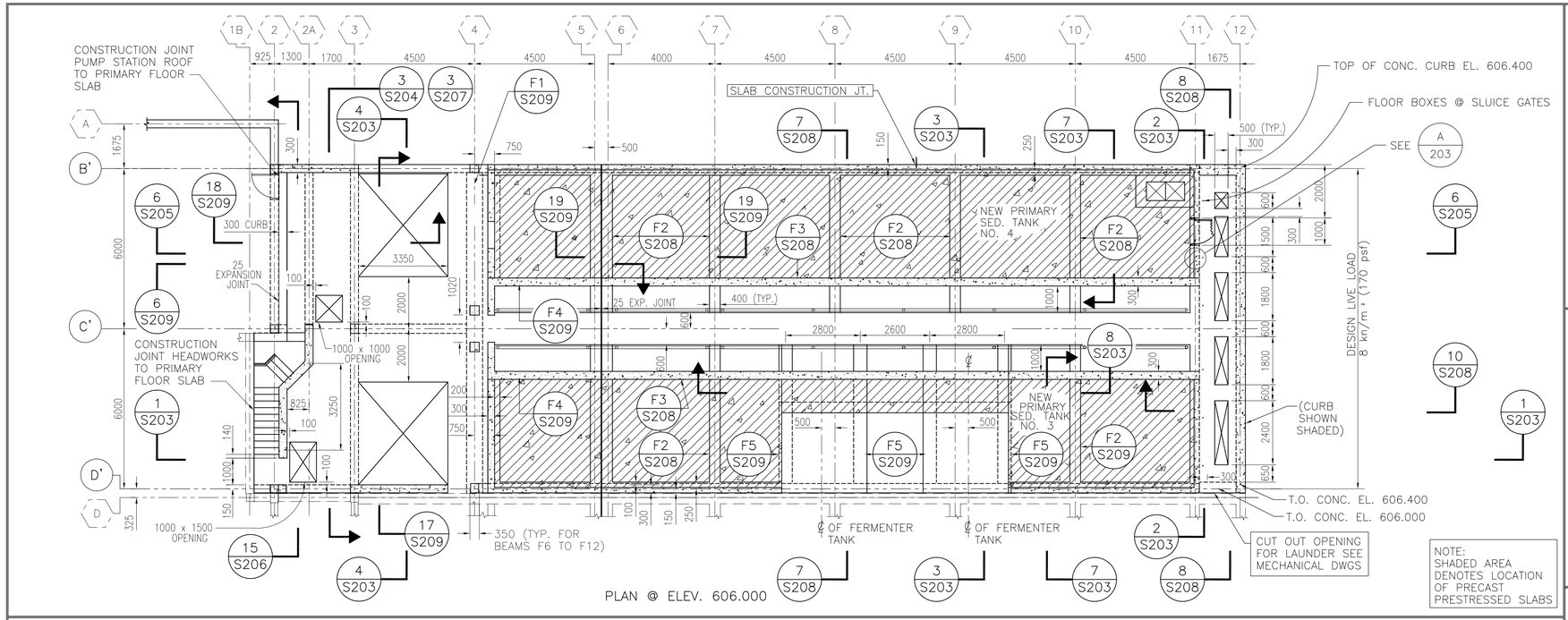

PLAN @ ELEV. 606.000

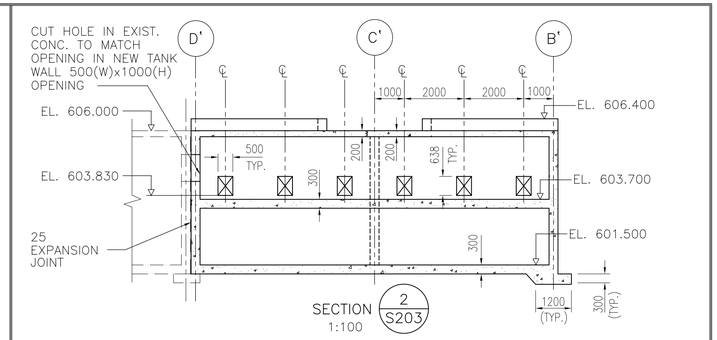

SECTION 2/S203
1:100

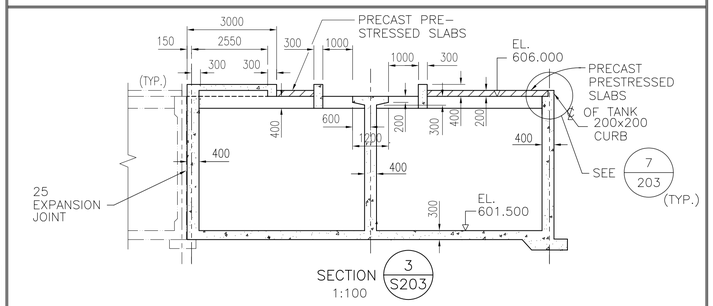

SECTION 3/S203
1:100

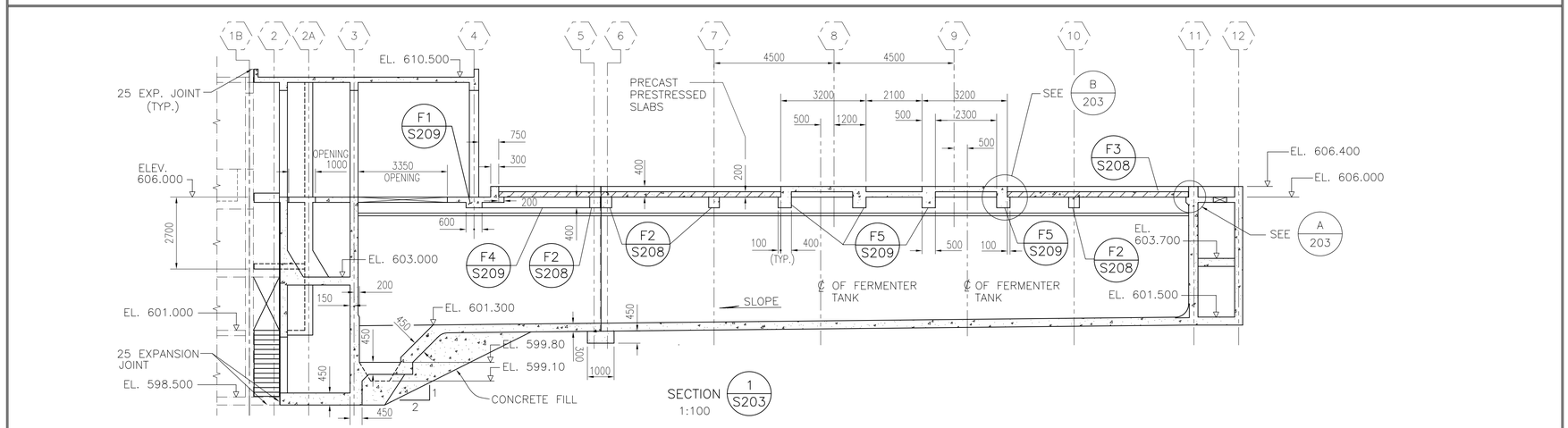

SECTION 1/S203
1:100

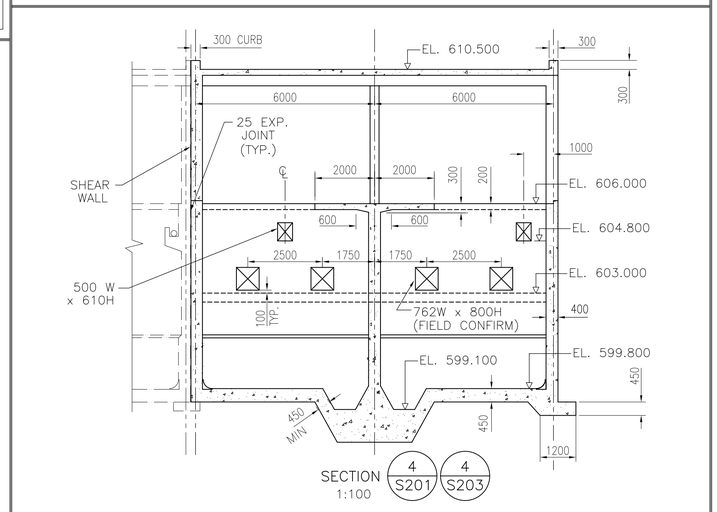

SECTION 4/S201 4/S203
1:100

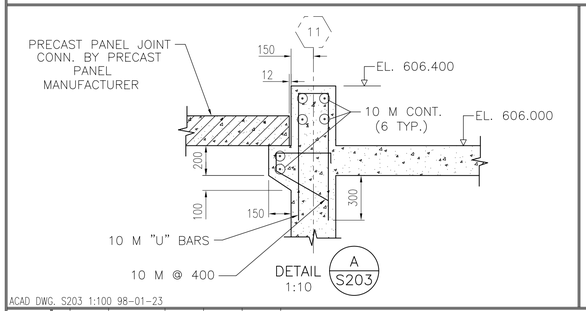

DETAIL A/S203
1:10

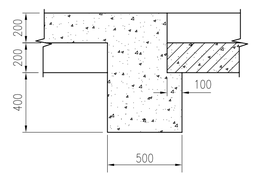

DETAIL B/S203
1:10

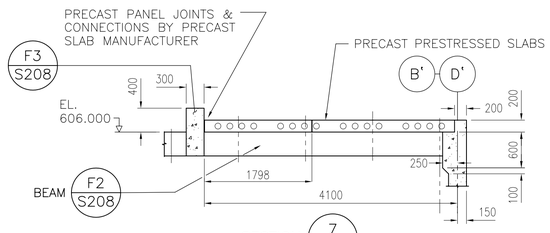

SECTION 7/S203
1:50

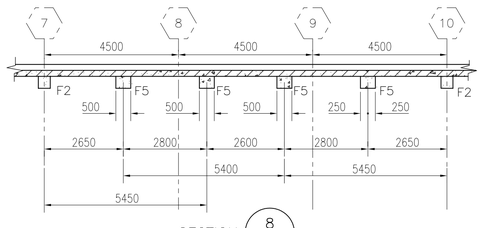

SECTION 8/S203
1:100

ACAD DWG. S203 1:100 98-01-23

REVISIONS	ISSUE	DATE	DRAWN	CHK'D	APP'D	DESCRIPTION
	B	APR/96	DBC	S.O.	S.O.	ISSUED FOR CONSTRUCTION
	C	JAN/98	JC			RECORD DRAWING

AutoCAD DRAWING

DESIGNED S.O./H.P.W.
DRAWN WLP/G.S.
CHECKED H.K./R.W.

DAYTON & KNIGHT LTD.
Consulting Engineers

RESORT MUNICIALITY OF WHISTLER
WASTEWATER TREATMENT PLANT–STAGE III EXPANSION–CONTRACT 1
PRIM. SED. TANKS–PLAN @ EL. 606.600–SECT. & CONC. OUTLINE

SCALE: 1:100
S203
DRAWING No. 179.11.1
SHEET 77 OF 249 ISSUE C