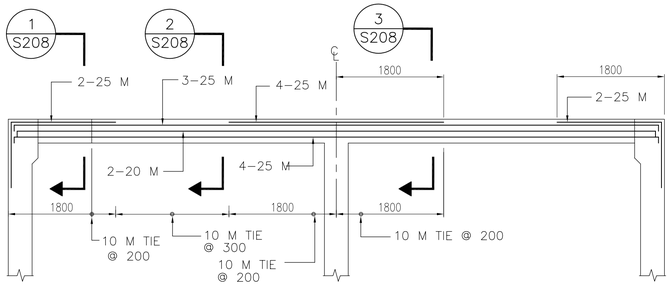

DETAIL F2 S203 BEAMS (TYP.) 1:50

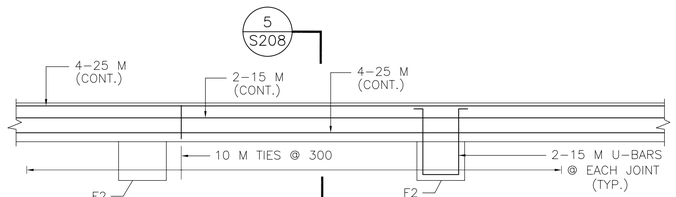

DETAIL F3 S203 BEAMS (TYP.) 1:50

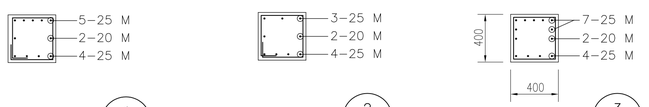

SECTION 1 S208 1:50 SECTION 2 S208 1:50 SECTION 3 S208 1:50

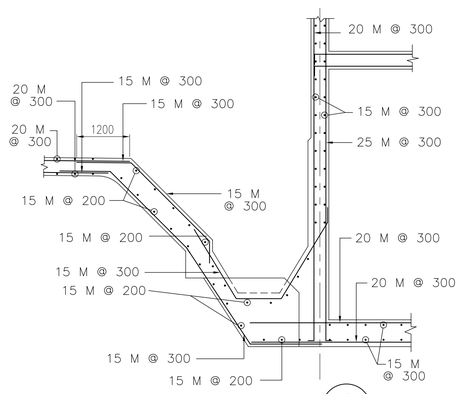

SECTION 4 S209

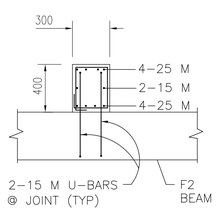

SECTION 5 S208 1:50

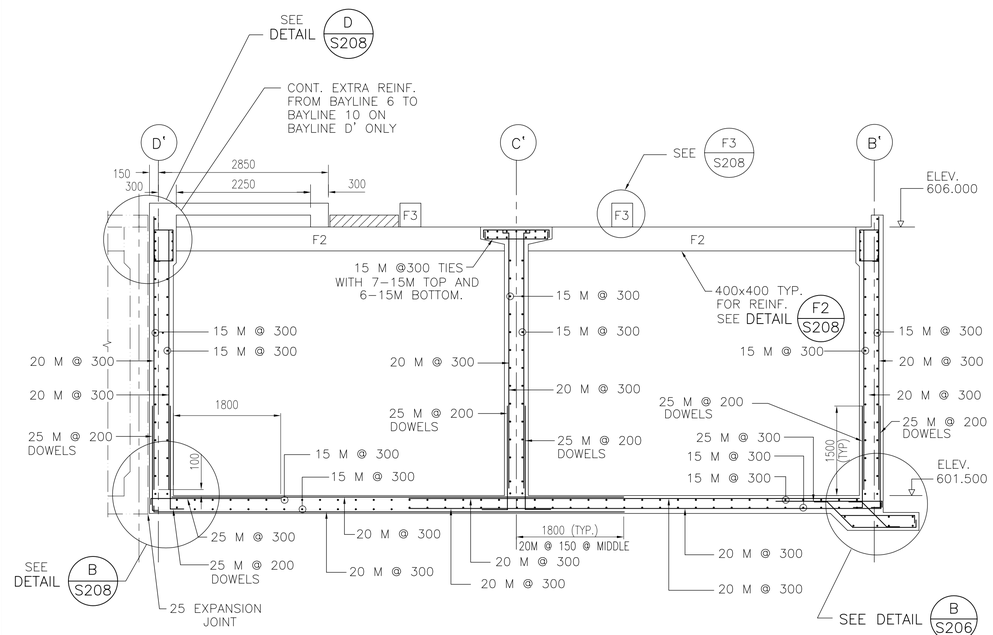

SECTION 7 S203 1:50

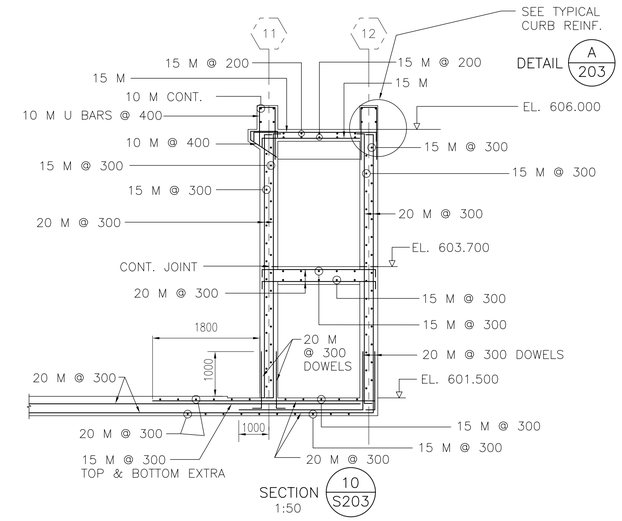

SECTION 10 S203 1:50

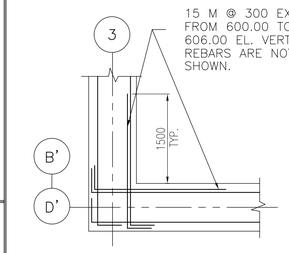

DETAIL A S202 A S201 1:50

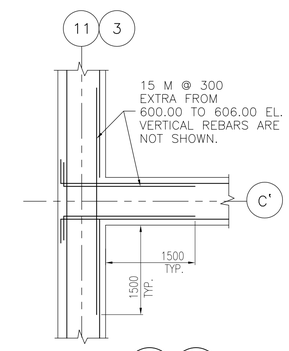

DETAIL B S202 B S201 1:50

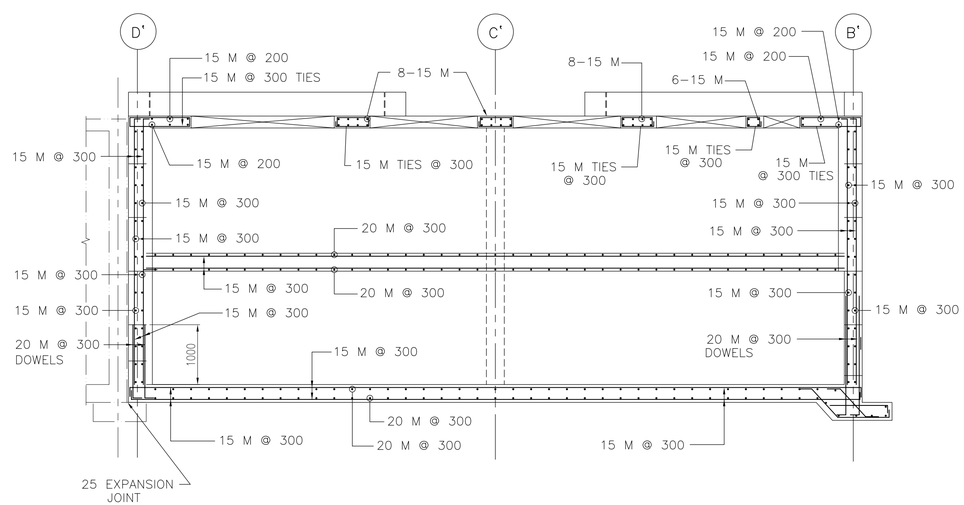

SECTION 8 S203 1:50

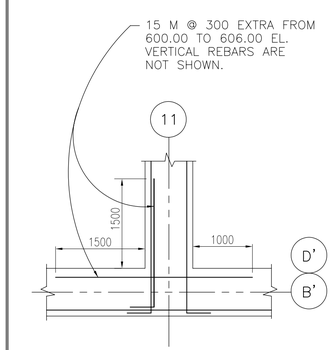

DETAIL C S201 1:50

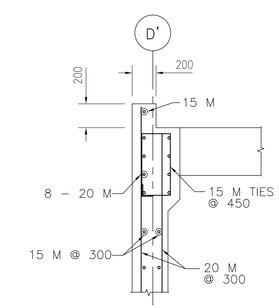

DETAIL D S208 1:25 (TYP.)

ACAD DWG S208 1:50 98-02-25

AutoCAD DRAWING REVISIONS	ISSUE	DATE	DRAWN	CHK'D	APP'D	DESCRIPTION	ISSUE	DATE	DRAWN	CHK'D	APP'D	DESCRIPTION
	B	APR/96	DBC	S.O.	S.O.	ISSUED FOR CONSTRUCTION						
	C	JAN/98	ES	RW	RW	RECORD DRAWING						

DESIGNED R.W./S.O.
DRAWN WLP/G.S.
CHECKED H.K.

DAYTON & KNIGHT LTD.
Consulting Engineers

RESORT MUNICIPALITY OF WHISTLER
WASTEWATER TREATMENT PLANT-STAGE III EXPANSION-CONTRACT 1
PRIMARY SEDIMENTATION TANKS-SECTIONS-REINFORCING

SCALE: 1:50 S208
DRAWING No. 179.11.1
SHEET 82 OF 249 ISSUE C