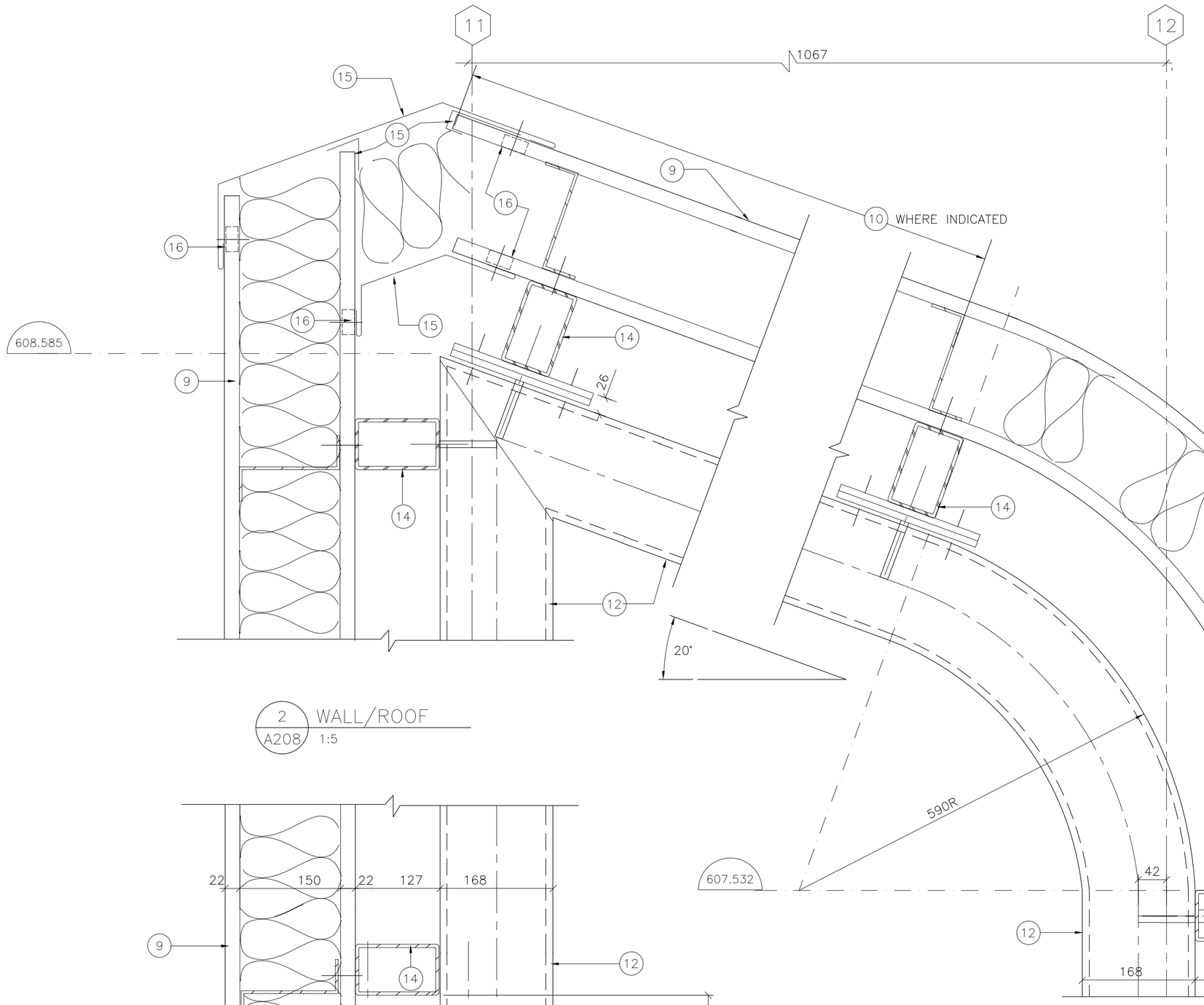

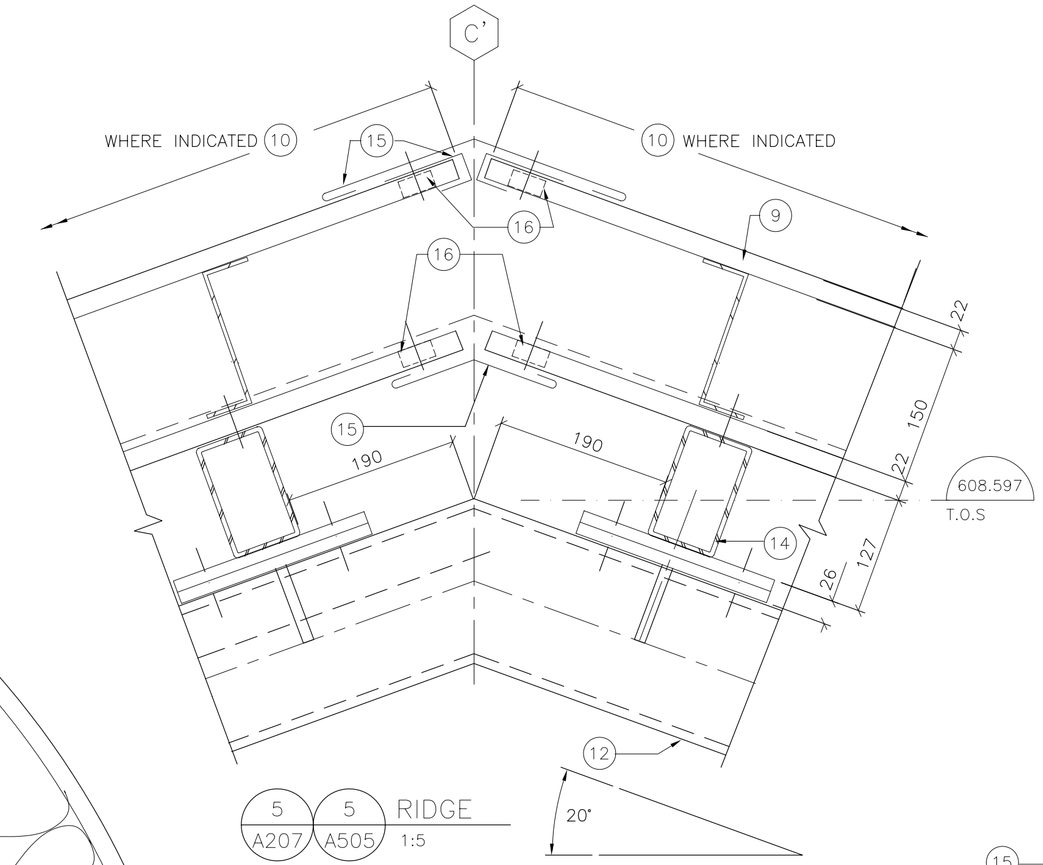

NOTE REFERENCES:

EXISTING CONSTRUCTION

(F) DOUBLE GLAZING IN ALUM.FRAMES

NEW CONSTRUCTION

(1) CONCRETE
(2) SANDBLASTED CONCRETE
(9) INSULATED PREFINISHED CORRUGATED STEEL CLADDING SYSTEM(TO MATCH EXISTING)
(10) CORRUGATED TRANSLUCENT SKYLIGHT PANEL
(12) 168 ∅ H.S.S. COLUMN
(14) 127 x 76.2 H.S.S GIRT/OR DOOR POST
(15) PREFINISHED STEEL FLASHING (BY CLADDING SUPPLIER)
(16) CONTINUOUS NEOPRENE CELL CLOSER (BY CLADDING SUPPLIER)
(18) CAULKING & BACK-UP ROD (BY CLADDING SUPPLIER)
(19) CAULKING & BACK-UP ROD (BY GENERAL CONTRACTOR)
(21) 2 PLY S.B.S ROOFING ON 100mm RIGID INSULATION ON VAPOUR RETARDANT
(24) FIBRE CANT STRIP
(27) TREATED CONT. 38mm WOOD PLATE C/W BEVELLED CEDAR SIDING CAP
(29) TREATED 19mm PLYWOOD
(38) 19 x 1.6mm STEEL SUB-GIRT

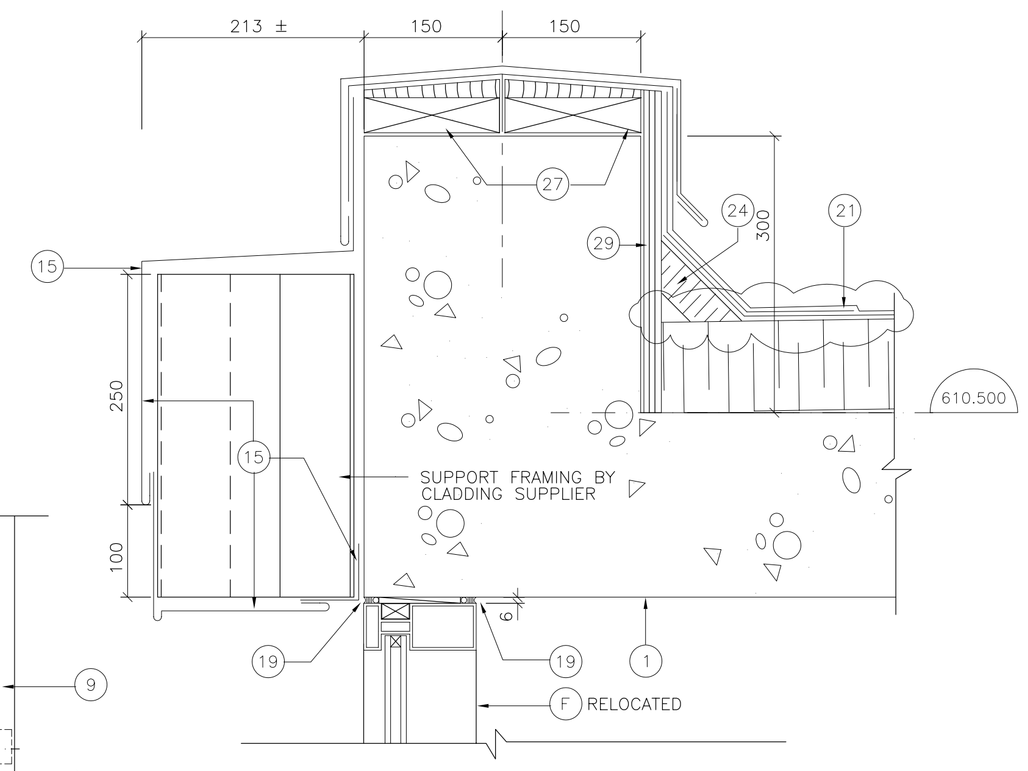

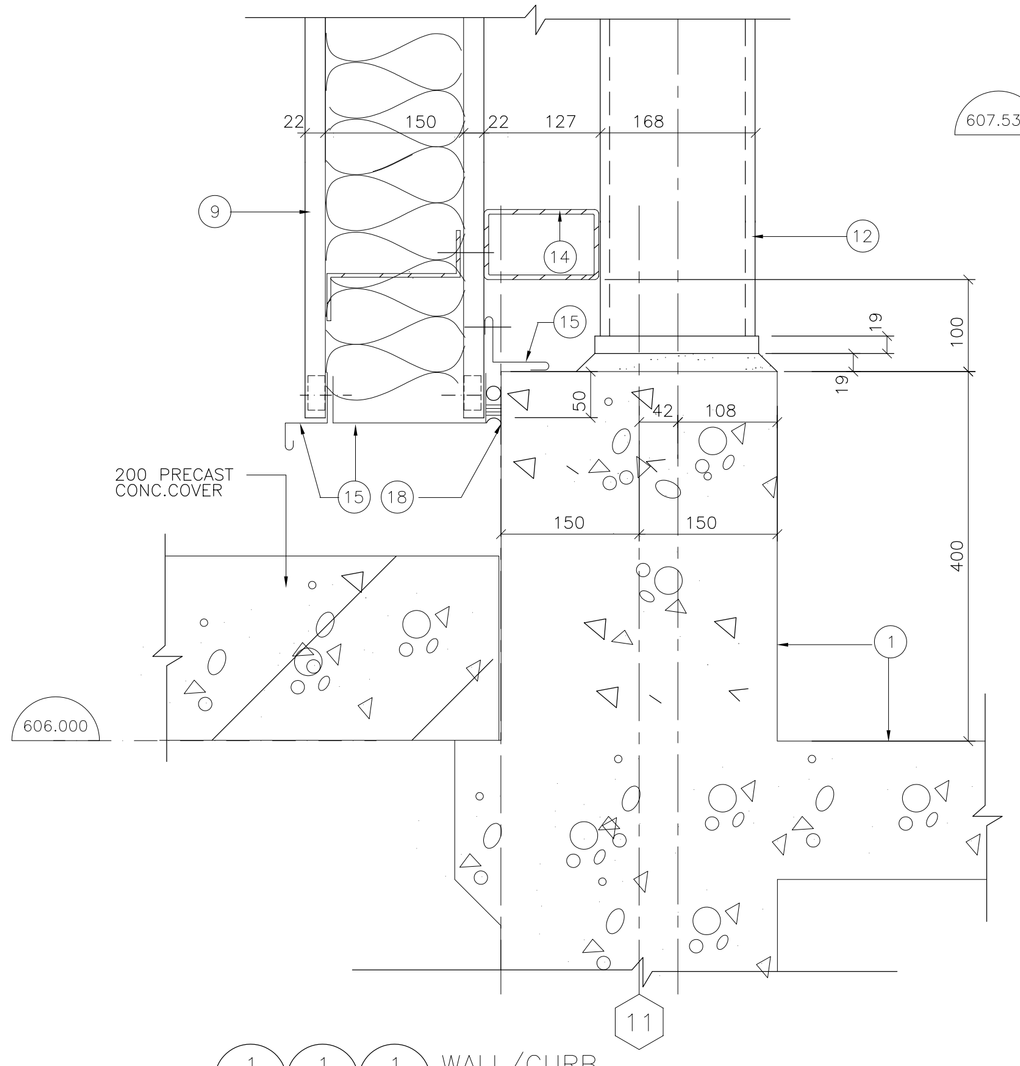

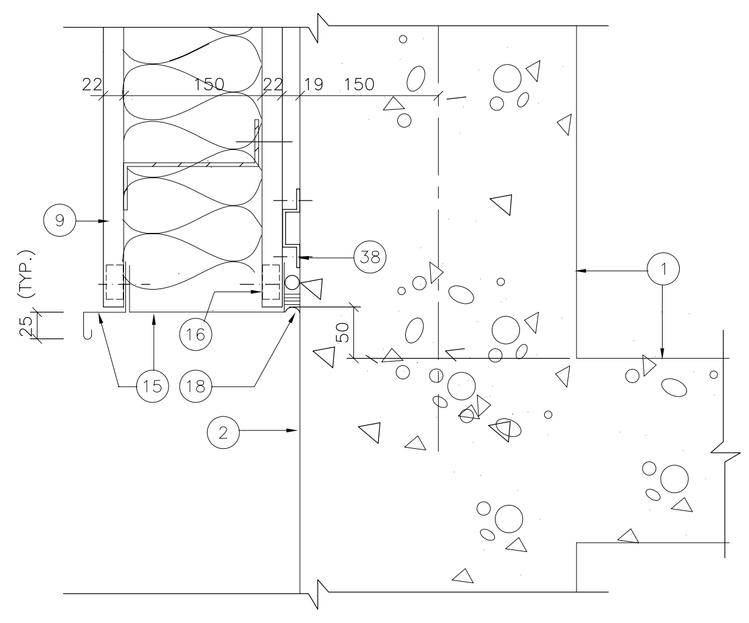

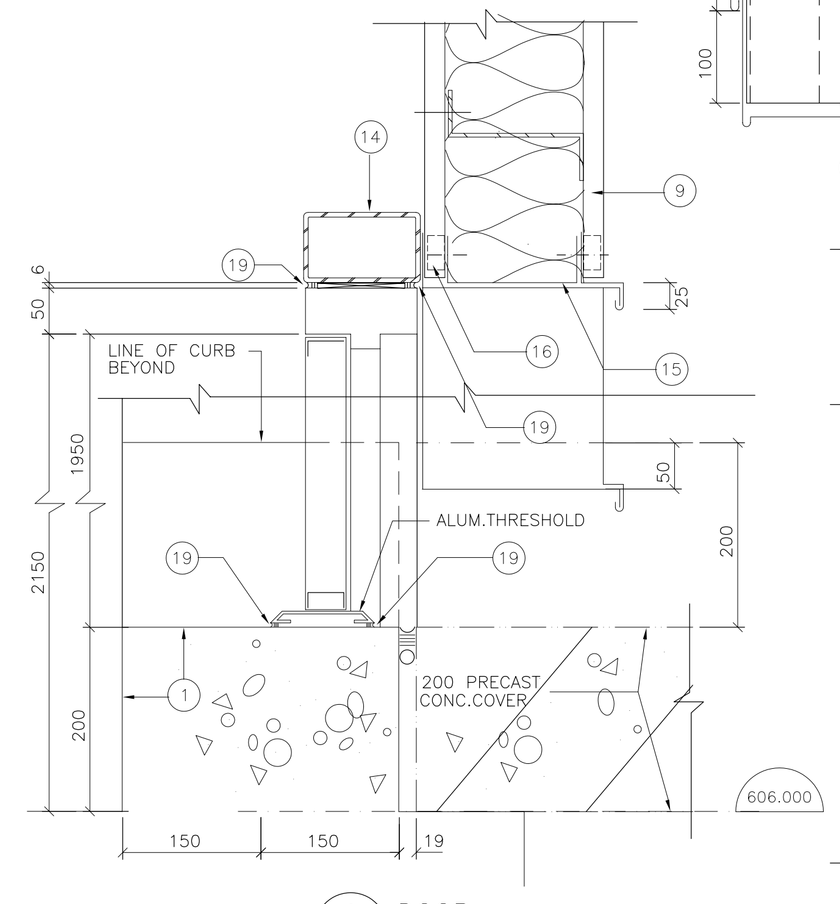

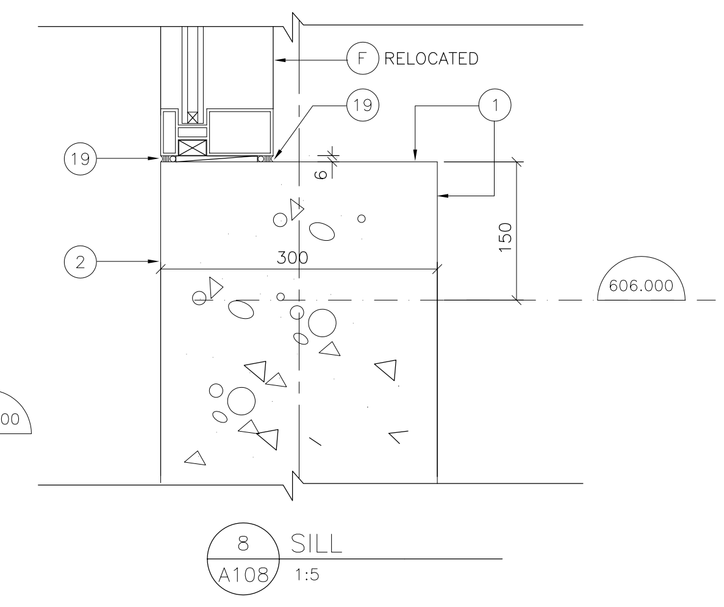

TOBY RUSSELL BUCKWELL & partners architects
1650 ALBERNI STREET, VANCOUVER, B.C.
CANADA, V6G 1B1. TEL.: [604] 682-6881
FAX: [604] 682-3081

ACAD DWG. A211 1:5 96-04-24

AutoCAD DRAWING

REVISIONS	ISSUE	DATE	DRAWN	CHK'D	APP'D	DESCRIPTION	ISSUE	DATE	DRAWN	CHK'D	APP'D	DESCRIPTION
	B	APR/96	E.S.	C.O.	C.O.	ISSUED FOR CONSTRUCTION						
						INCLUDES ADDENDA ITEMS						

DESIGNED D.K.M.
DRAWN B.D.C.
CHECKED C.O.

DAYTON & KNIGHT LTD.
Consulting Engineers

RESORT MUNICIPALITY OF WHISTLER
WASTEWATER TREATMENT PLANT-STAGE III EXPANSION - CONTRACT 1
HEADWORKS & PRIMARY SED. TANKS
DETAILS - SHEET 3

SCALE: 1:5
AIII/A2II
DRAWING No. 179.11.1
SHEET 52 OF 249 ISSUE B