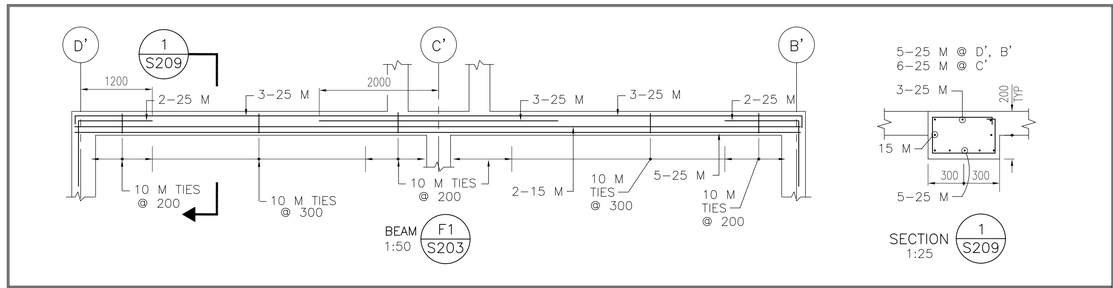

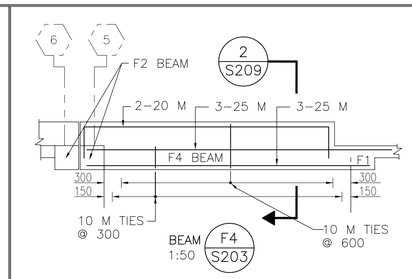

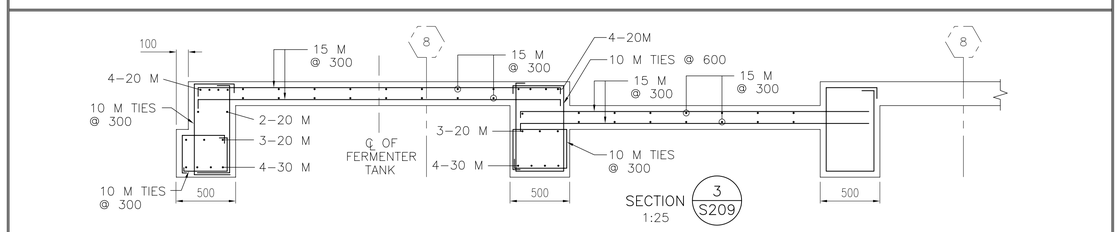

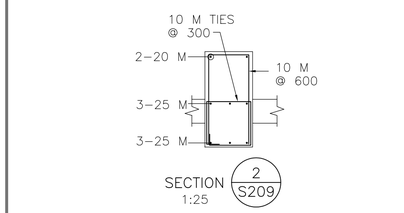

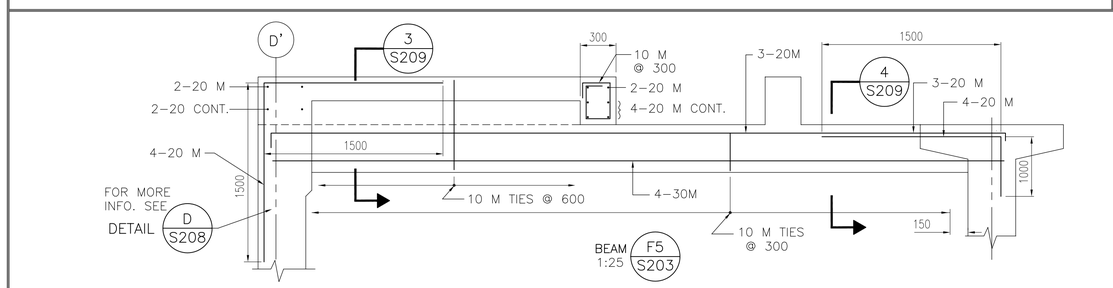

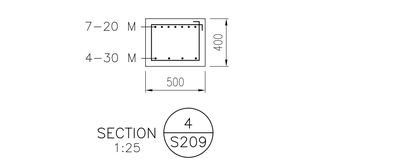

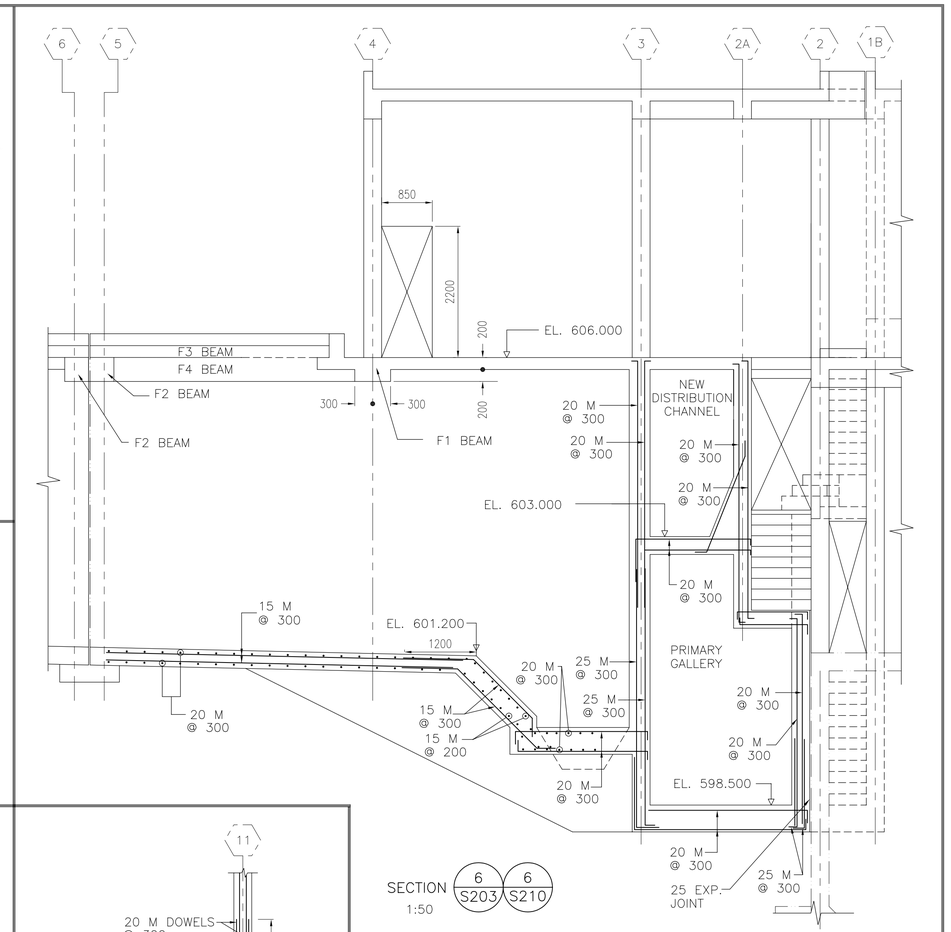

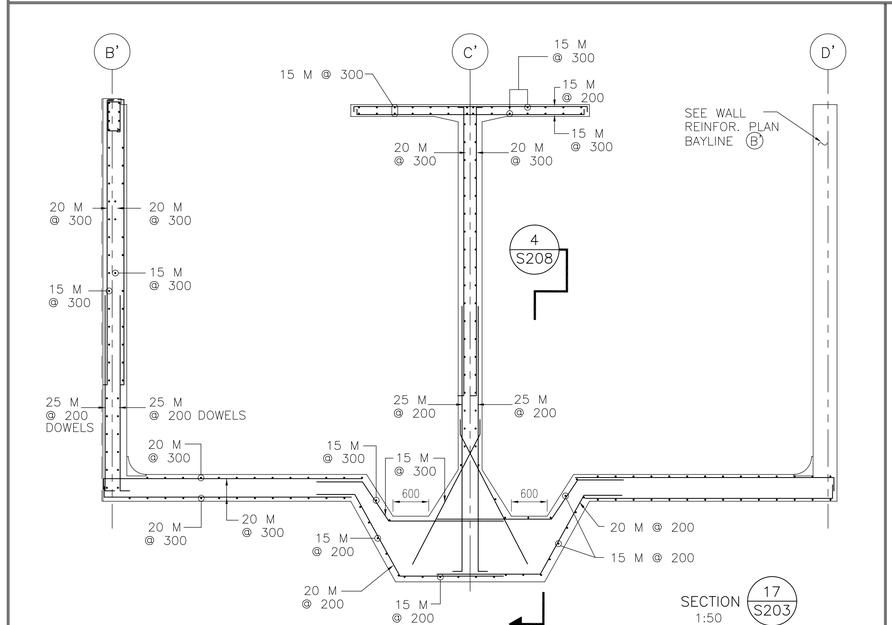

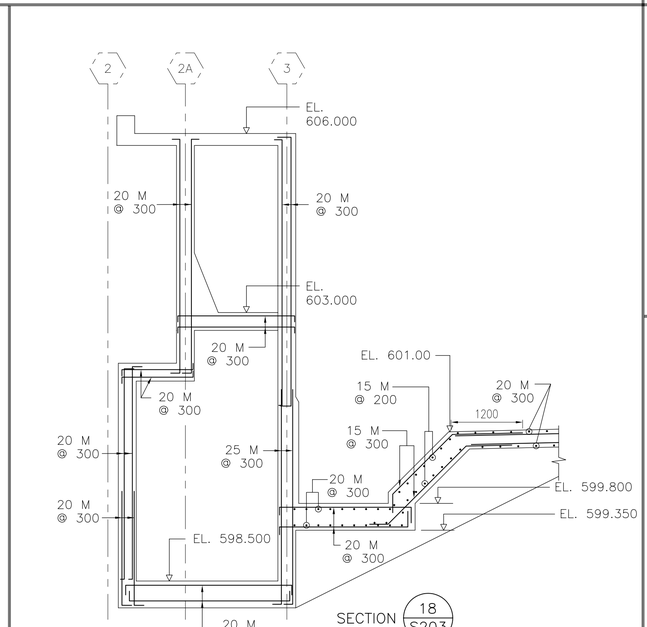

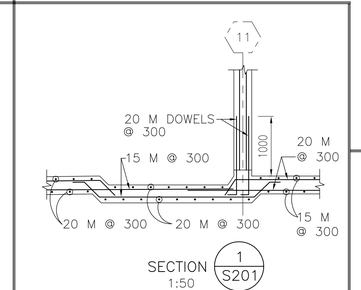

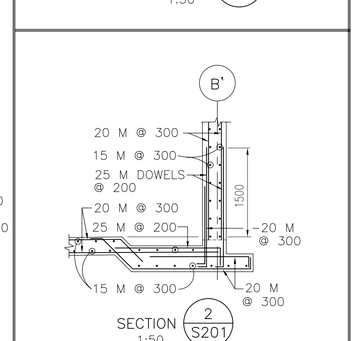

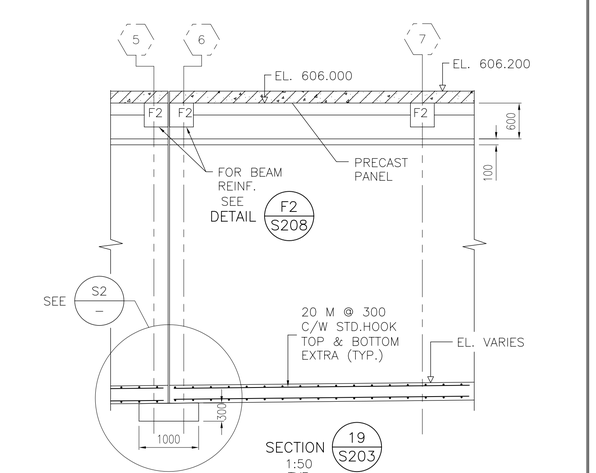

ACAD DWG No. S209 1:50 98-02-23

REVISIONS	ISSUE	DATE	DRAWN	CHK'D	APP'D	DESCRIPTION	ISSUE	DATE	DRAWN	CHK'D	APP'D	DESCRIPTION
	B	APR/96	DBC	S.O.	S.O.	ISSUED FOR CONSTRUCTION						
	C	JAN/98	JC			RECORD DRAWING						

AutoCAD DRAWING

DESIGNED S.O.
DRAWN WP/GS
CHECKED H.K.

DAYTON & KNIGHT LTD.
Consulting Engineers

RESORT OF MUNICIPALITY OF WHISTLER
WASTEWATER TREATMENT PLANT–STAGE III EXPANSION–CONTRACT 1
PRIMARY SEDIMENTATION TANKS–SECTIONS–REINFORCING

SCALE: AS SHOWN
S209
DRAWING No. 179.11.1
SHEET 83 OF 249 ISSUE C