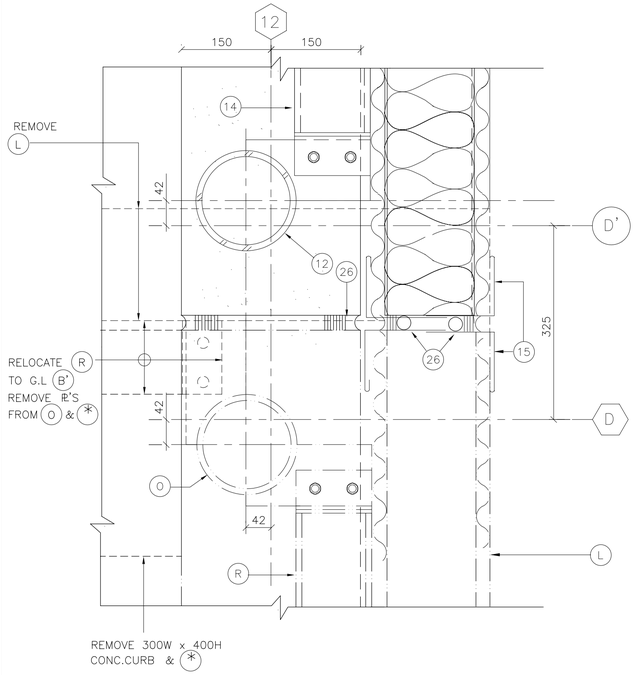

1 / A103 WALL DETAIL 1:5

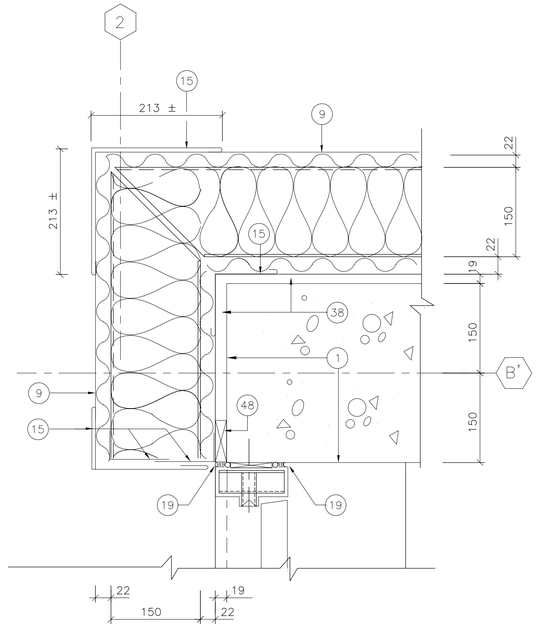

2 / A102 WALL DETAIL 1:5

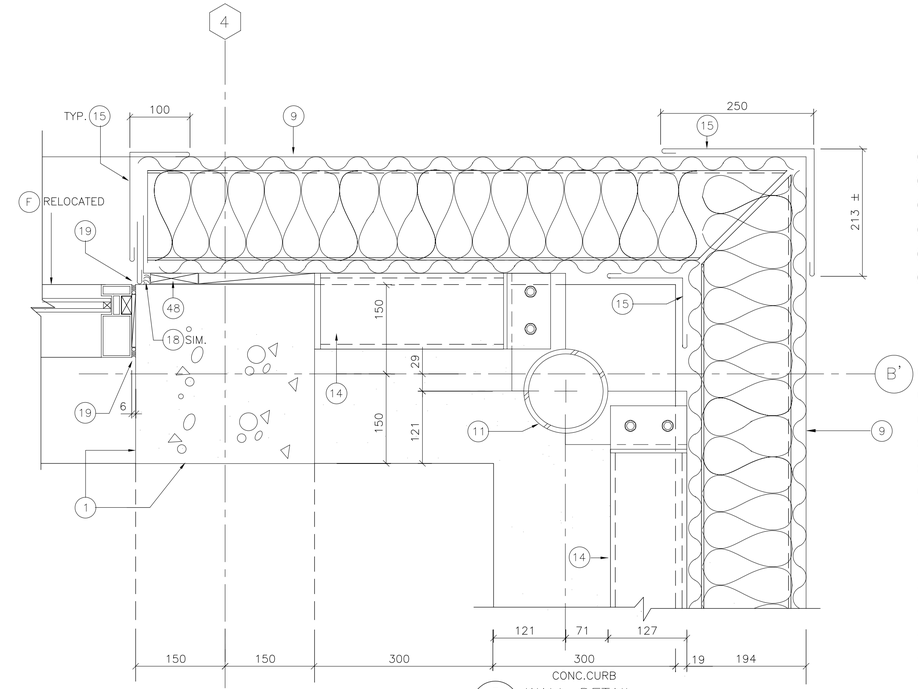

3 / A102 WALL DETAIL 1:5

NOTE REFERENCES:

EXISTING CONSTRUCTION

- A CONCRETE
- F DOUBLE GLAZING IN ALUM.FRAMES
- L INSULATED PREFINISHED CORRUGATED STEEL CLADDING SYSTEM
- N 141 ∅ HSS COLUMN
- O 168 ∅ HSS COLUMN
- R 127 x 76.2 H.S.S GIRT/OR DOOR POST

NEW CONSTRUCTION

- 1 CONCRETE
- 9 INSULATED PREFINISHED CORRUGATED STEEL CLADDING SYSTEM(TO MATCH EXISTING)
- 11 141 ∅ HSS COLUMN
- 12 168 ∅ H.S.S. COLUMN
- 13 CONC. CURB (W x H)
- 14 127 x 76.2 H.S.S GIRT/OR DOOR POST
- 15 PREFINISHED STEEL FLASHING (BY CLADDING SUPPLIER)
- 18 CAULKING & BACK-UP ROD (BY CLADDING SUPPLIER)
- 19 CAULKING & BACK-UP ROD (BY GENERAL CONTRACTOR)
- 26 CONTINUOUS SEALANT & BACK-UP ROD
- 31 GALV. STEEL GUARDRAIL (REFER MECH. DWGS)
- 38 19mm X 1.6mm STEEL SUB-GIRT
- 48 CONTINUOUS TREATED WOOD BLOCKING

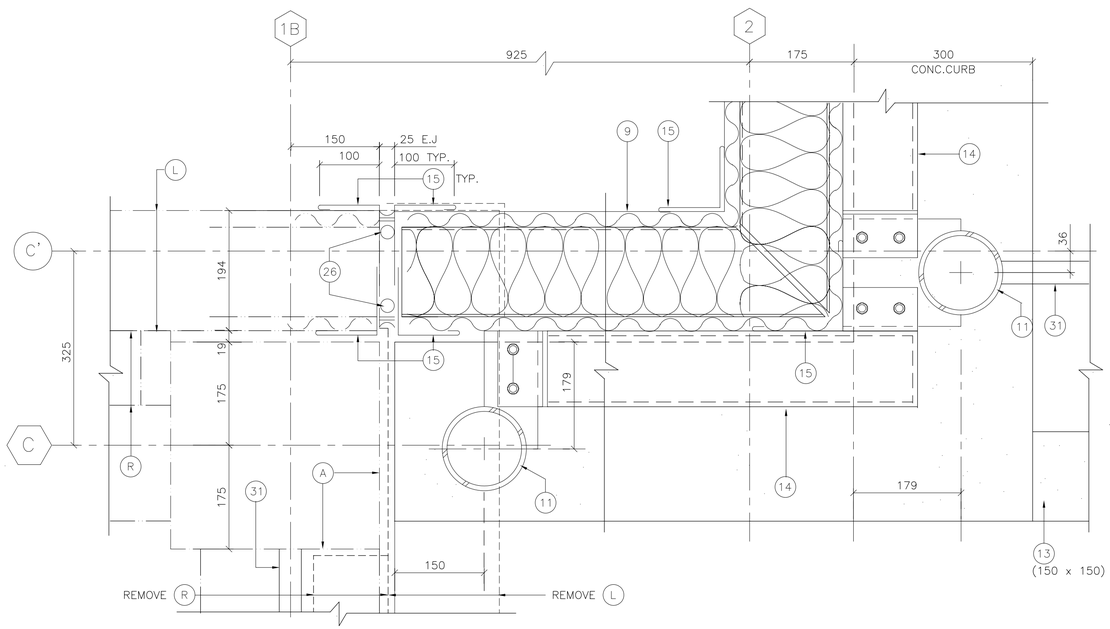

4 / A102 WALL DETAIL 1:5

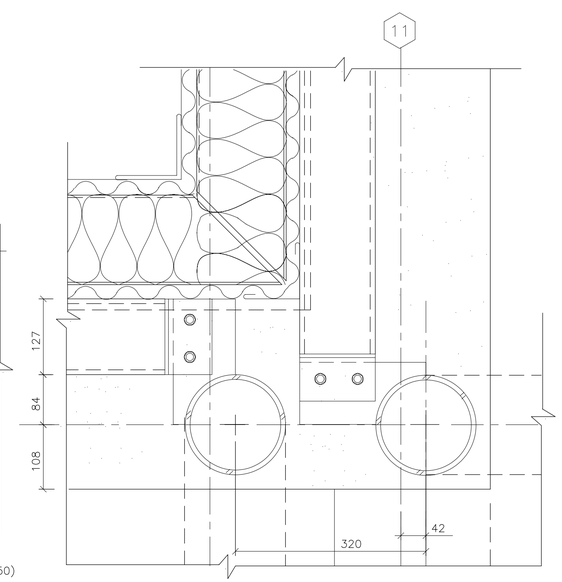

6 / A103 WALL DETAIL 1:5

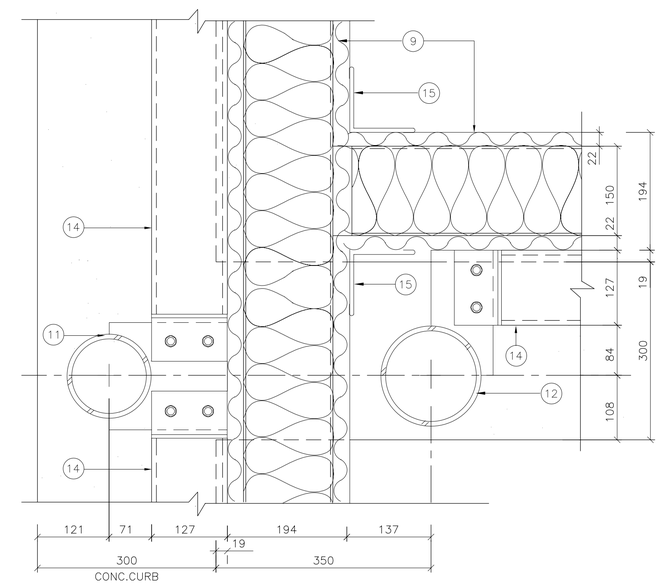

5 / A102 WALL DETAIL 1:5

TOBY RUSSELL BUCKWELL
& partners architects
1650 ALBERNI STREET, VANCOUVER, B.C.
CANADA, V6G 1B1. TEL.: [604] 682-6881
FAX: [604] 682-3081

ACAD DWG. A109 1:5 96-04-24

AutoCAD DRAWING

REVISIONS

ISSUE	DATE	DRAWN	CHK'D	APP'D	DESCRIPTION	ISSUE	DATE	DRAWN	CHK'D	APP'D	DESCRIPTION
B	APR/96	E.S.	C.O.	C.O.	ISSUED FOR CONSTRUCTION						

DESIGNED D.K.M.
DRAWN B.D.C.
CHECKED C.O.

DAYTON & KNIGHT LTD.
Consulting Engineers

RESORT MUNICIPALITY OF WHISTLER
WASTEWATER TREATMENT PLANT-STAGE III EXPANSION - CONTRACT 1
HEADWORKS & PRIMARY SED. TANKS
DETAILS - SHEET 1

SCALE: 1:5 A109/A209
DRAWING No. 179.11.1
SHEET 50 OF 249 ISSUE B