NOTE REFERENCES

EXISTING CONSTRUCTION

- (*) MAKE GOOD ALL EXPOSED/DISTURBED SURFACES
- (A) CONCRETE
- (B) SANDBLASTED CONCRETE
- (C) 256mm INSULATED 90mm CONC.BLK.CAVITY WALL
- (L) INSULATED PREFINISHED CORRUGATED STEEL CLADDING SYSTEM
- (S) PREFINISHED STEEL FLASHING

NEW CONSTRUCTION

- (1) CONCRETE
- (2) SANDBLASTED CONCRETE
- (3) 256mm INSULATED 90mm CONCRETE BLOCK CAVITY WALL
- (4) 190mm CONC. BLOCK
- (6) 200H x 190W CONCRETE CURB
- (7) DOUBLE GLAZING IN ALUMINUM FRAMES
- (8) DOUBLE 6mm FLOAT GLASS IN 146 x 50mm STEEL FRAMES
- (8A) SINGLE 6mm FLOAT GLASS IN 146 x 50mm STEEL FRAMES
- (9) INSULATED PREFINISHED CORRUGATED STEEL CLADDING SYSTEM (TO MATCH EXISTING)
- (14) 127 x 76.2 H.S.S. GIRT/OR DOOR POST
- (15) PREFINISHED STEEL FLASHING (BY CLADDING SUPPLIER)
- (16) CONTINUOUS NEOPRENE CELL CLOSER (BY CLADDING SUPPLIER)
- (17) 64mm CONCRETE WEARING SLAB ON 6MIL. POLYURETHANE SLIP SHEET ON 75mm RIGID INSULATION
- (19) CAULKING & BACK-UP ROD (BY GENERAL CONTRACTOR)
- (20) 2 PLY SBS ROOFING
- (23) FIELD PAINTED 0.76mm ALUM.FLASHING C/W 75 x 1.22mm ALUM.HOLD DOWN CLIPS @ 1200mm O.C (BY ROOFING CONTRACTOR)
- (24) FIBRE CANT STRIP
- (25) CONCRETE SURFACE SEALER (REFER STRUCT. DWGS.)
- (26) CONTINUOUS SEALANT & BACK-UP ROD
- (27) TREATED CONT 38mm WOOD PLATE C/W BEVELLED CEDAR SIDING CAP
- (28) TREATED 12mm PLYWOOD
- (29) TREATED 19mm PLYWOOD
- (33) 19 x 19mm RUSTICATION (TO MATCH EXISTING)
- (34) ALUM. WEATHER LOUVRE (W x H x D) (PAINT TO MATCH COLOUR OF ADJ. WALL FINISH)
- (35) 100 x 100 x 1200 LG.GALV.STEEL BUMPER ANGLE
- (36) 203.2 x 152.4 x 4.78 HSS DOOR JAMB
- (37) 3.2mm PLATED C150 x 12 FRAMED DOOR HEAD
- (39) CONTINUOUS 25 x 3mm ALUM. FLAT BAR (BY ROOFING CONTR)
- (40) CAULKING (BY ROOFING CONTRACTOR)
- (41) THROUGH-WALL FLASHING
- (42) 50mm RIGID INSULATION
- (43) 76 x 76 X 6mm GALV. STEEL ANGLE (WITH 100mm MIN.BEARING)
- (44) 125 x 76 x 6mm GALV. STEEL ANGLE (WITH 200mm MIN.BEARING)
- (45) FORMED 1.6mm STEEL FLASHING (BY FRAME MFR.)
- (46) ALCAN 37777 ALUMINUM CLIP TYPE WINDOW SILL (OR EQUAL)
- (47) 19mm PLYWOOD C/W 19mm FIR TRIM (PAINT EXPOSED FACES)
- (48) CONTINUOUS TREATED WOOD BLOCKING
- (49) ROLL-UP DOOR GUIDES (BY DOOR MFR.)
- (50) CONTINUOUS SAFETY BAR (BY DOOR MFR.)
- (51) CONTINUOUS 50 x 50 x 6mm EMBEDDED GALV. STL.ANGLE (LOCATE TO SUIT DOOR BOTTOM)
- (54) 19mm BITUMEN IMPREGNATED FIBREBOARD JOINT FILLER
- (55) WEEP HOLES AT 800mm O.C
- (69) 13mm GYPSUM BOARD ON 'THERMAL-STUD' CHANNELS @ MAX. 610mm O.C. ON 50mm RIGID INSULATION ON CONCRETE OR 190mm CONC. BLOCK (FULL HT. TO U/S STRUCTURE)
- (86) 16mm GYPSUM BOARD ON 64mm STEEL STUDS @ 406mm O.C.
- (87) 16mm GYPSUM BOARD ON 92mm STEEL STUDS @ 406mm O.C.

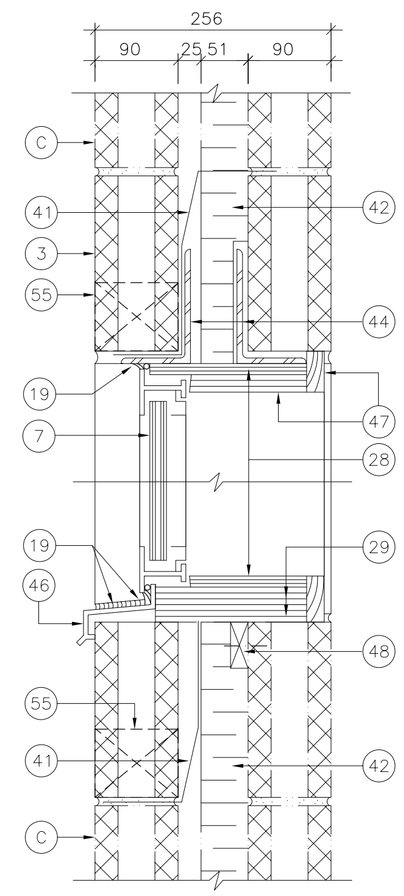

5 A106 WINDOW HEAD/SILL 1:5

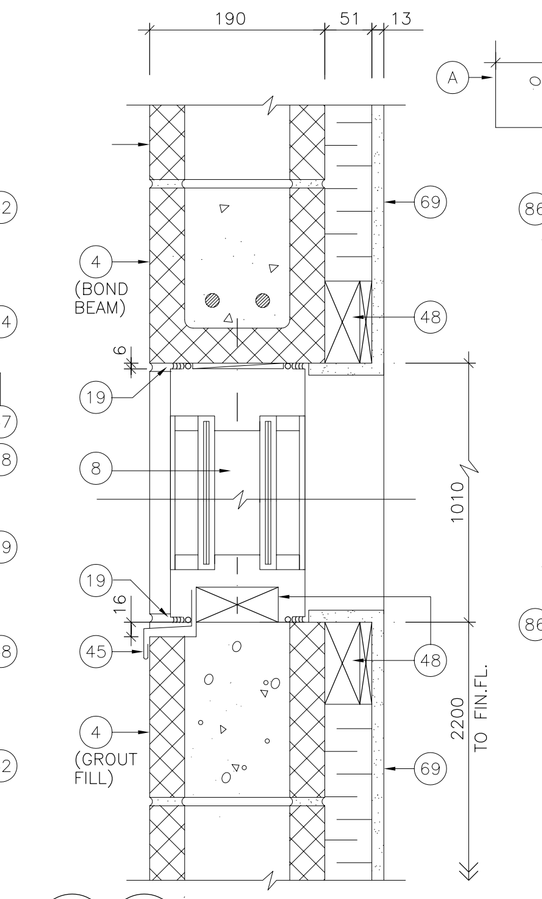

8 A105 / 8 A108 STL WINDOW HEAD/SILL 1:5

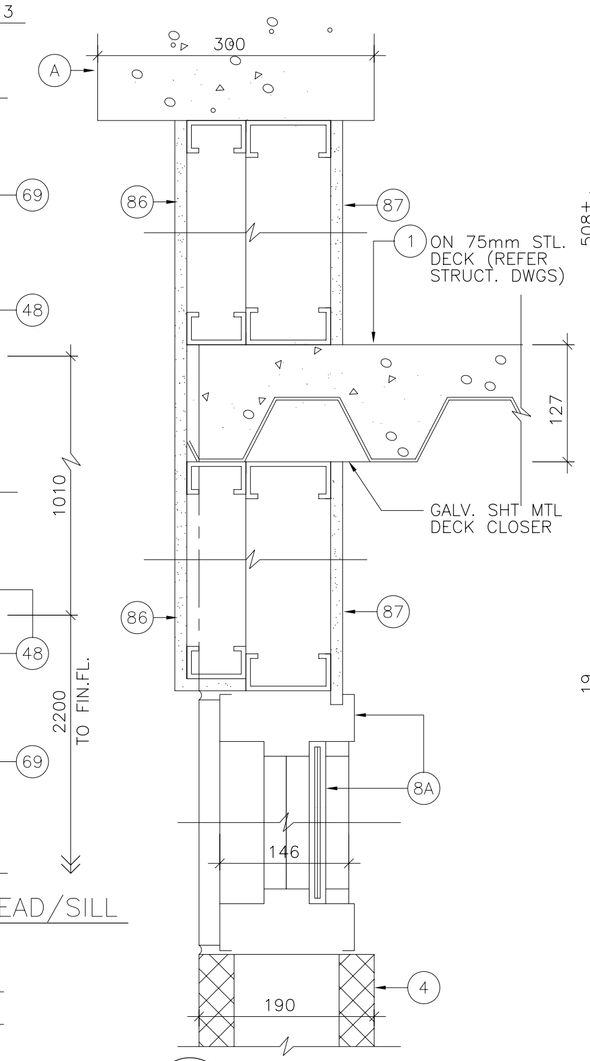

12 A108 STL WINDOW HEAD/SILL 1:5

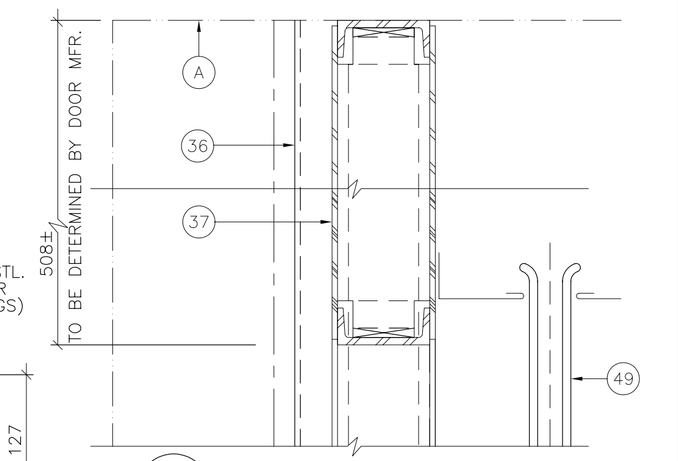

13 A108 ROLL-UP DOOR HEAD 1:5

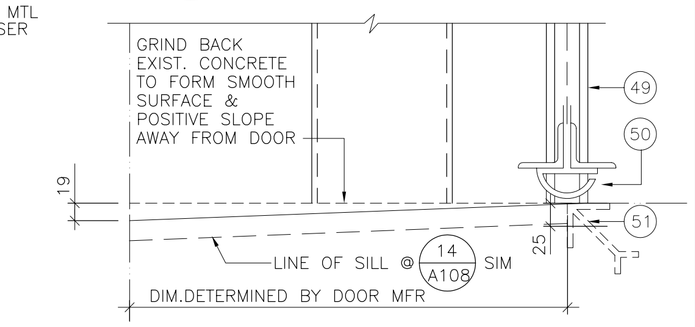

14 A108 ROLL-UP DOOR SILL 1:5

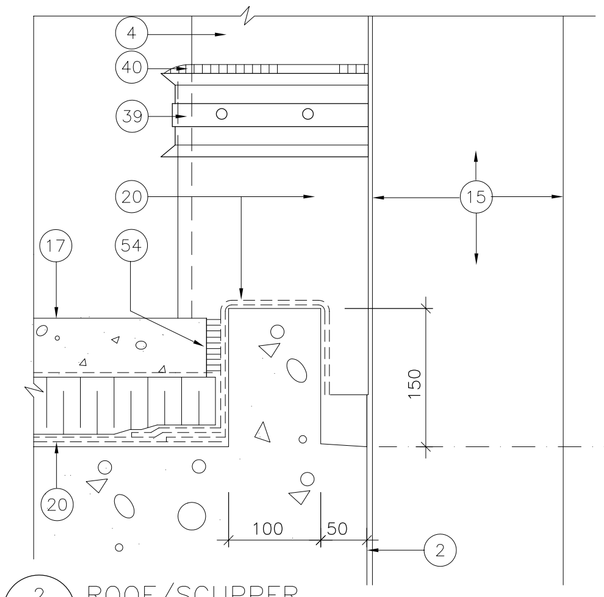

2 A112 ROOF/SCUPPER 1:5

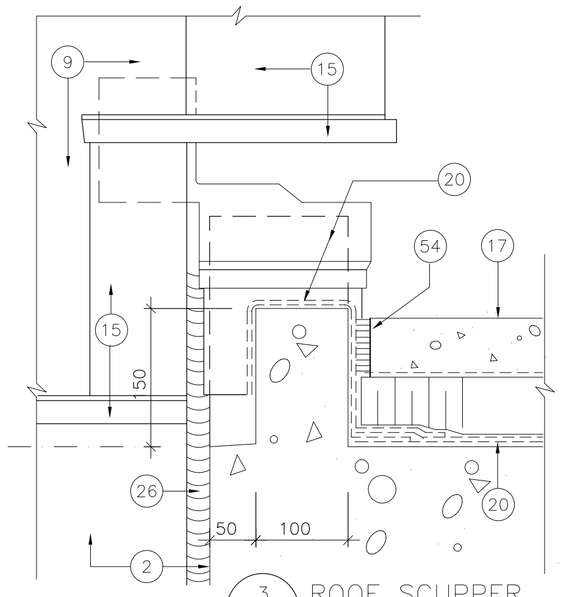

3 A112 ROOF SCUPPER 1:5

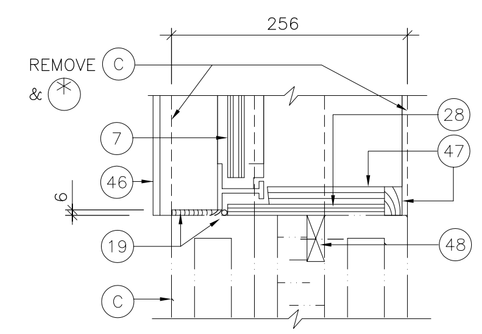

6 A101 WINDOW JAMB 1:5

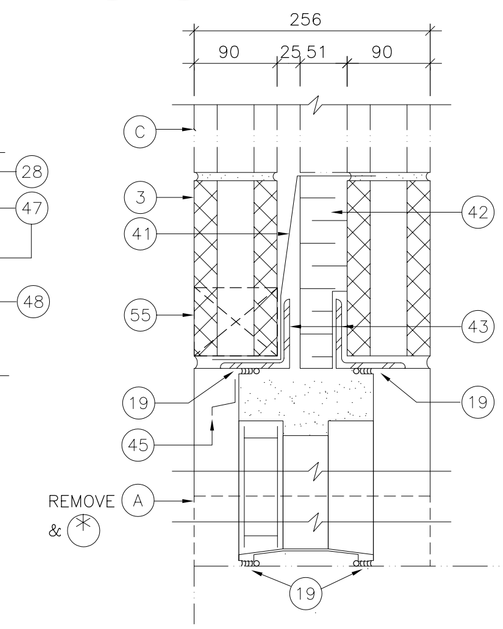

9 A106 DOOR HEAD & SILL 1:5

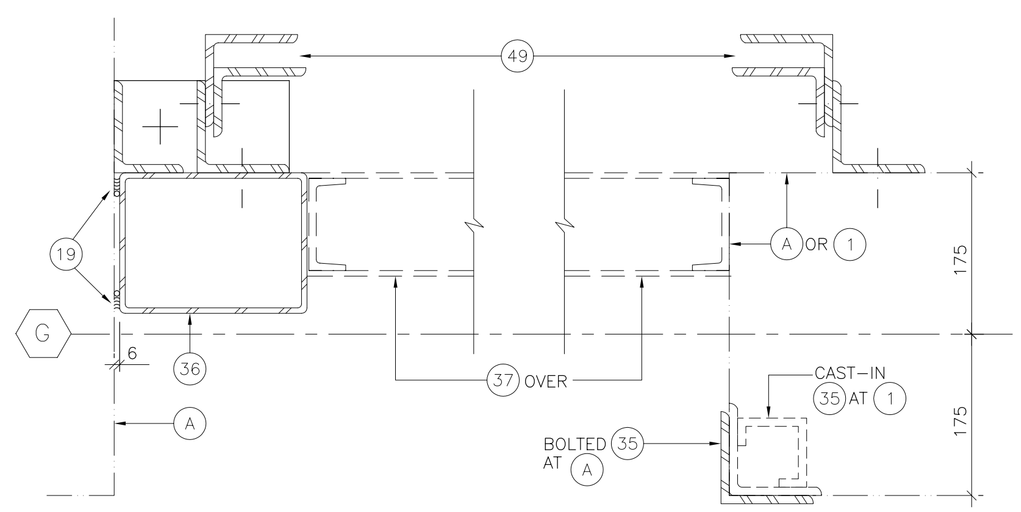

15 A101 ROLL-UP DOOR JAMB 1:5

16 A101 ROLL-UP DOOR JAMB 1:5

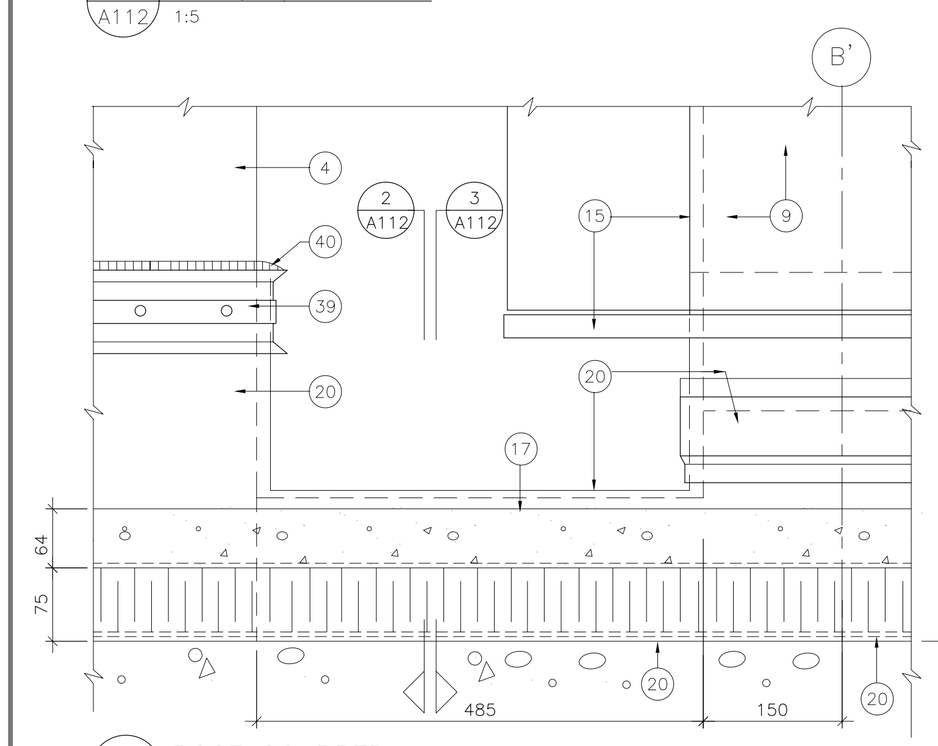

1 A102 ROOF SCUPPER 1:5

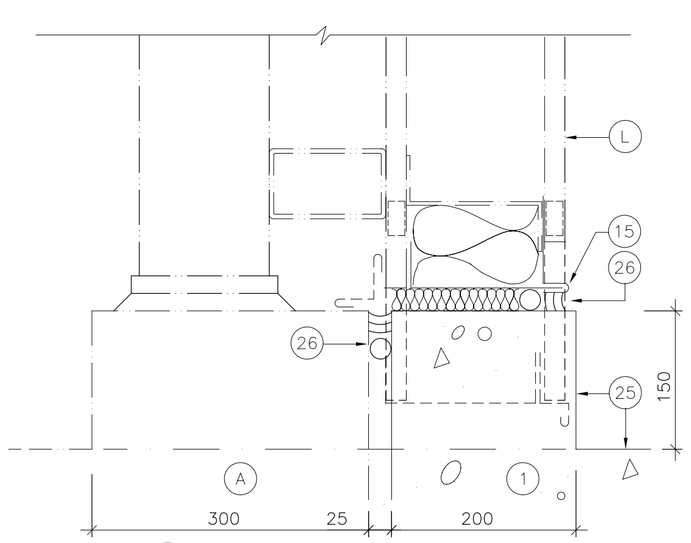

4 A208 WALL/CURB 1:5

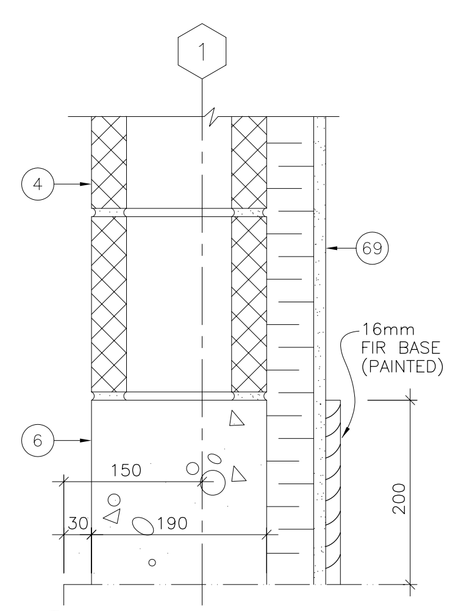

7 A107 / 7 A108 WALL/CURB 1:5

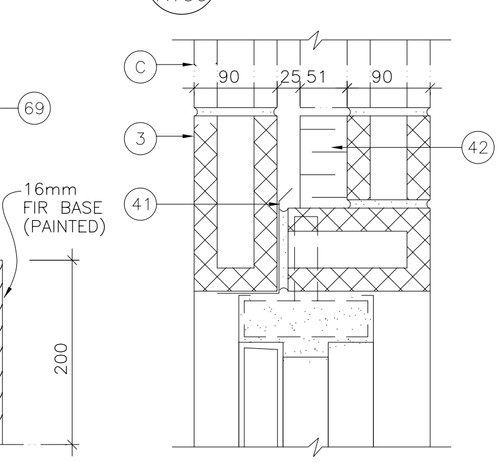

10 A101 DOOR JAMB 1:5

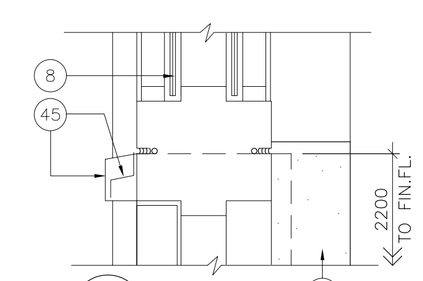

11 A105 TRANSOM 1:5

TOBY RUSSELL BUCKWELL & partners architects
1650 ALBERNI STREET, VANCOUVER, B.C.
CANADA, V6G 1B1. TEL.: [604] 682-6881
FAX: [604] 682-3081

ACAD DWG. A112 1:5 96-04-24

AutoCAD DRAWING

REVISIONS

ISSUE	DATE	DRAWN	CHK'D	APP'D	DESCRIPTION	ISSUE	DATE	DRAWN	CHK'D	APP'D	DESCRIPTION
B	APR/96	E.S.	C.O.	C.O.	ISSUED FOR CONSTRUCTION						

DESIGNED D.K.M.
DRAWN B.D.C.
CHECKED C.O.

DAYTON & KNIGHT LTD.
Consulting Engineers

RESORT MUNICIPALITY OF WHISTLER
WASTEWATER TREATMENT PLANT-STAGE III EXPANSION - CONTRACT 1
HEADWORKS & PRIMARY SED. TANKS
DETAILS - SHEET 4

SCALE: 1:5 | A112/A212

DRAWING No. 179.11.1
SHEET 53 OF 249 ISSUE B