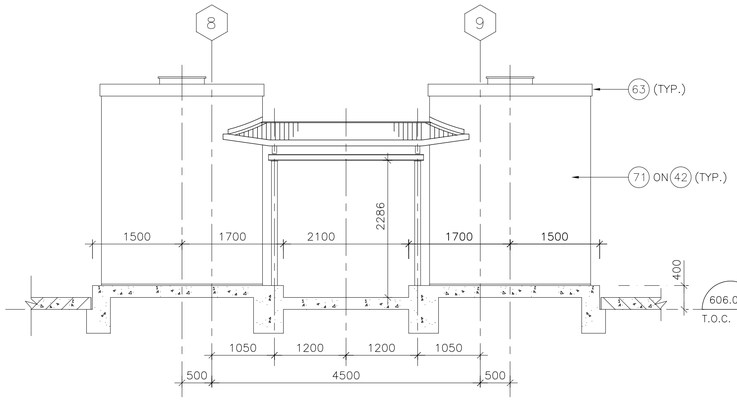

3 A215 ELEVATION 1:50

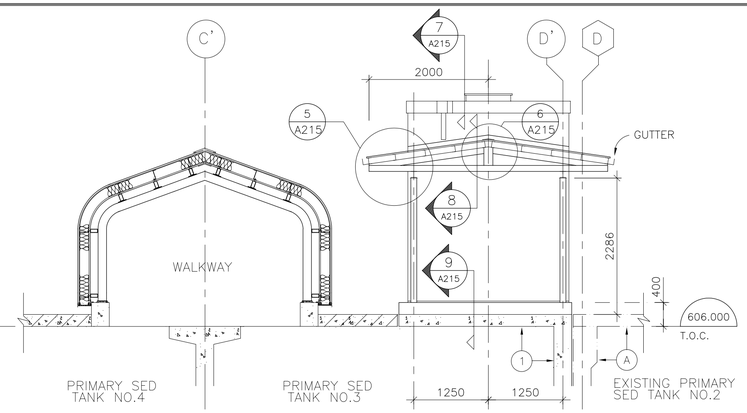

4 A215 SECTION 1:50

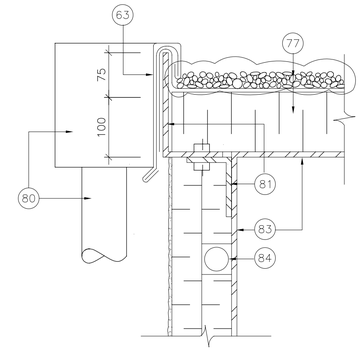

7 A215 DETAIL 1:50

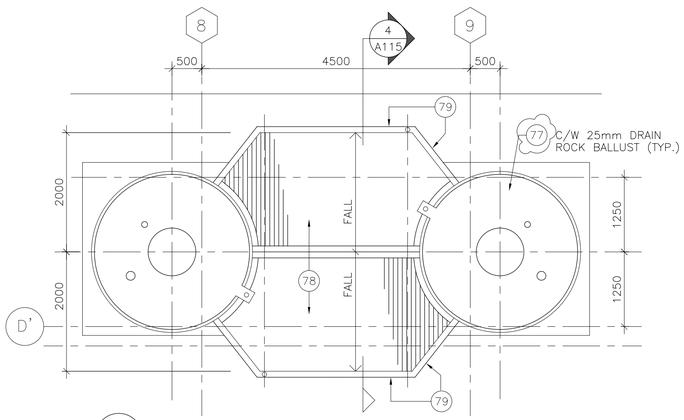

2 A204 ROOF PLAN 1:50

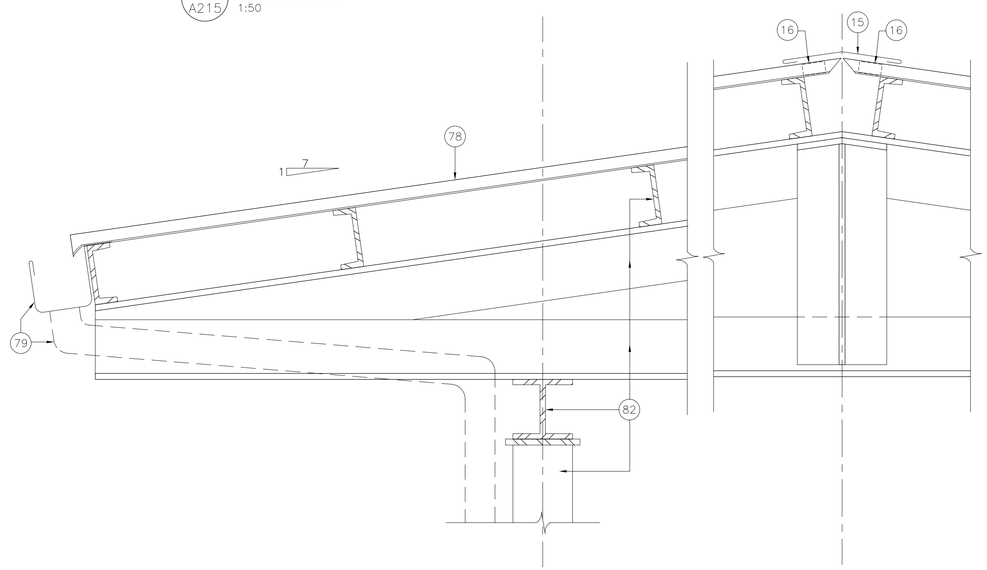

5 A215 DETAIL 1:50

6 A215 DETAIL 1:50

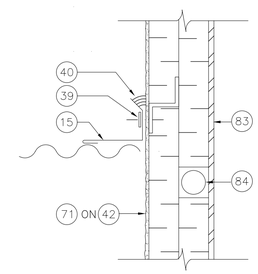

8 A215 DETAIL 1:50

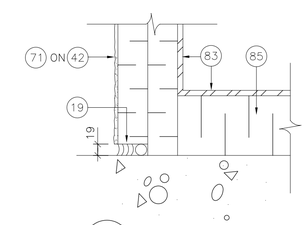

9 A215 DETAIL 1:50

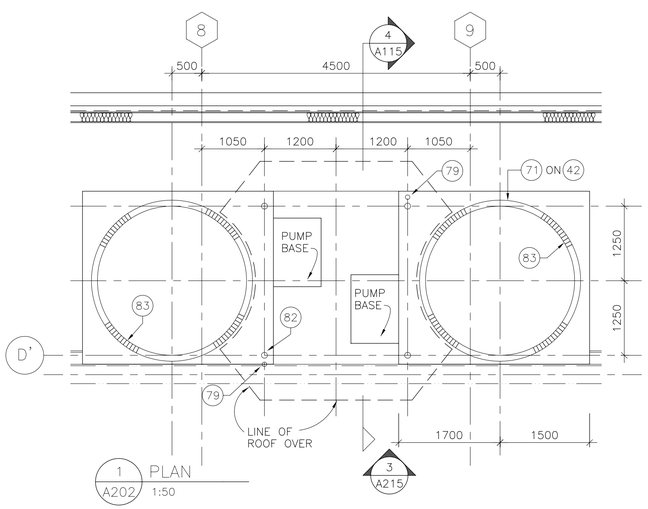

1 A202 PLAN 1:50

NOTE REFERENCES

EXISTING CONSTRUCTION

- (A) CONCRETE

NEW CONSTRUCTION

- (1) CONCRETE
- (15) PREFINISHED STEEL FLASHING (BY CLADDING SUPPLIER)
- (16) CONTINUOUS NEOPRENE CELL CLOSER (BY CLADDING SUPPLIER)
- (19) CAULKING & BACK-UP ROD (BY GENERAL CONTRACTOR)
- ~~(22A) E.P.D.M. MEMBRANE~~ DELETED
- (39) CONTINUOUS 25x3mm ALUM. FLAT BAR (BY ROOFING CONTRACTOR)
- (40) CAULKING (BY ROOFING CONTRACTOR)
- (42) 50mm RIGID INSULATION
- (63) FIELD PAINTED 0.76mm ALUM. FLASHING C/W 75x1.22mm ALUM. HOLDDOWN CLIPS AT 1200mm O.C. (BY ROOFING CONTRACTOR)
- (71) ACRYLIC STUCCO ON 50mm RIGID INSULATION
- (77) 25mm DRAIN ROCK BALLAST ON E.P.D.M. MEMBRANE ON 100mm RIGID INSULATION ON VAPOUR RETARDER
- (78) PREFINISHED CORRUGATED STEEL ROOFING (BY CLADDING SUPPLIER)
- (79) PREFINISHED 0.61mm STEEL GUTTER & RWL.
- (80) FIELD PAINTED 0.76mm ALUM. SCUPPER & RWL.
- (81) 175x100x4.8mm STEEL CURB BOLTED TO 100x100x4.8mm ST. STEEL MOUNTING ANGLES WELDED TO ST. STEEL TANK
- (82) STRUCTURAL STEEL SUPPORT FRAMING (REFER STRUCT. DWGS.)
- (83) 2500ø x 4.8mm ST. STEEL TANK (REFER MECH. DWGS.)
- (84) 50mmø HEATING PIPES (REFER MECH. DWGS.)
- (85) INSULATION (REFER MECH. DWGS.)

TOBY RUSSELL BUCKWELL & partners architects
1650 ALBERNI STREET, VANCOUVER, B.C.
CANADA, V6G 1B1. TEL.: [604] 682-6881
FAX: [604] 682-3081

ACAD DWG. A115 1:50 96-04-24

AutoCAD DRAWING

REVISIONS

ISSUE	DATE	DRAWN	CHK'D	APP'D	DESCRIPTION	ISSUE	DATE	DRAWN	CHK'D	APP'D	DESCRIPTION
B	APR/96	E.S.	C.O.	C.O.	ISSUED FOR CONSTRUCTION						
					INCLUDES ADDENDA ITEMS						

DESIGNED D.K.M.
DRAWN B.D.C.
CHECKED C.O.

DAYTON & KNIGHT LTD.
Consulting Engineers

RESORT MUNICIPALITY OF WHISTLER
WASTEWATER TREATMENT PLANT-STAGE III EXPANSION - CONTRACT 1
HEADWORKS & PRIMARY SED. TANKS
VFA FERMENTATION SYSTEM-PLANS, ELEVATIONS, SECTIONS, DETAILS

SCALE: 1:50 | A115/A215

DRAWING No. 179.11.1
SHEET 56 OF 249 ISSUE B