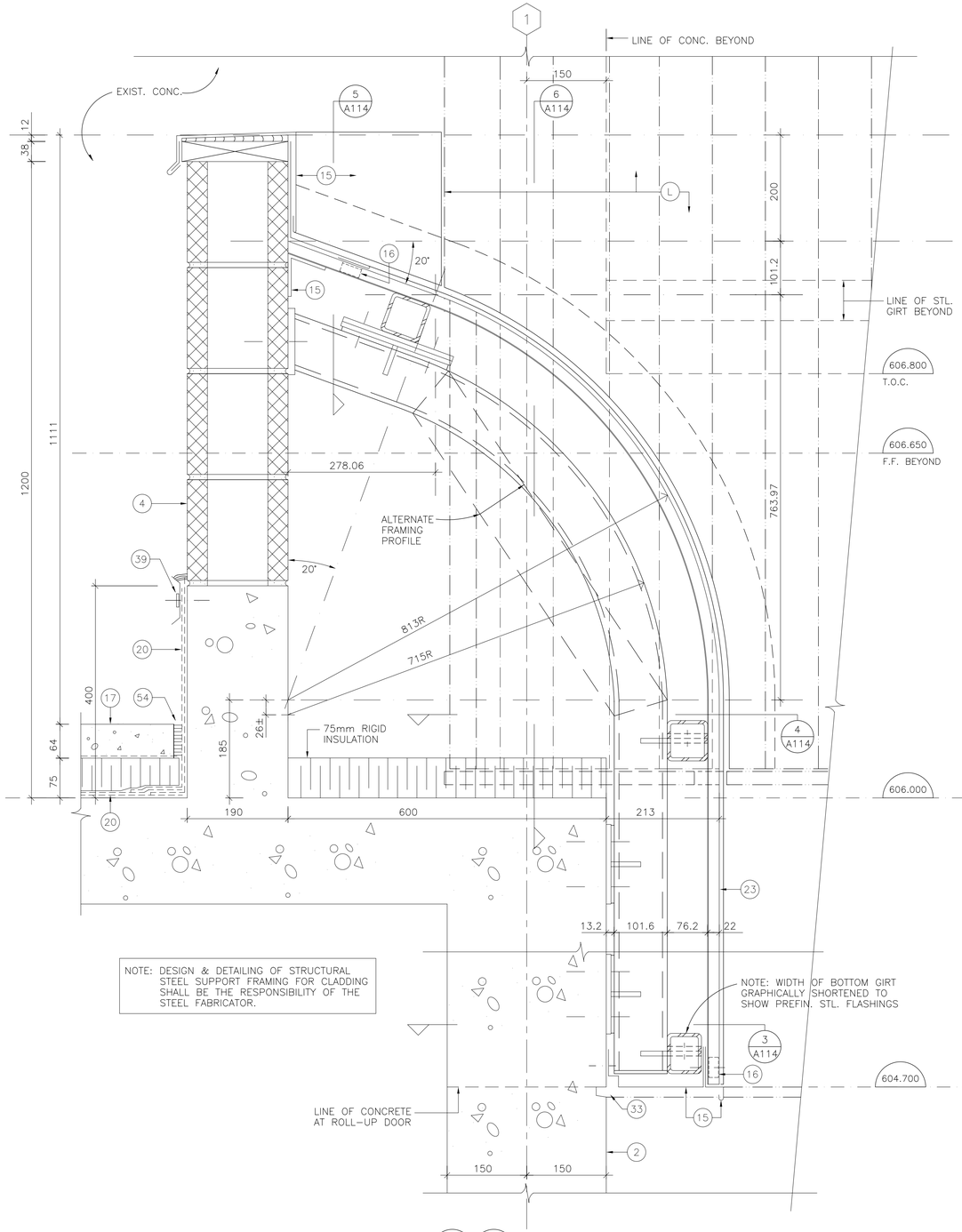

1 / A108 — 1 / A505 WALL DETAIL 1:5

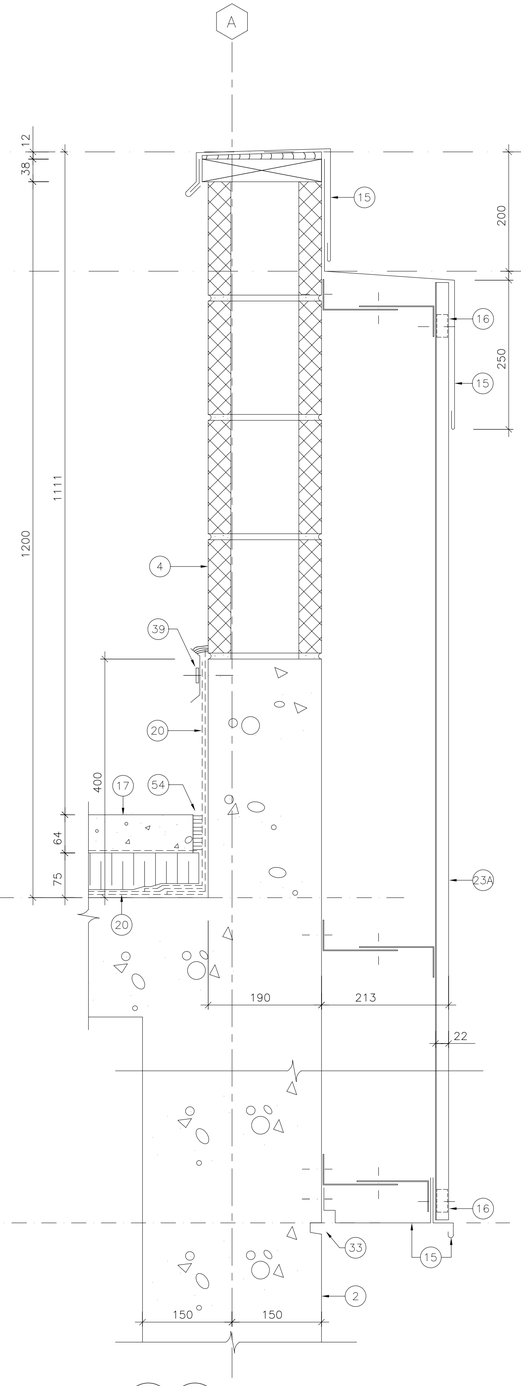

2 / A108 — 2 / A505 WALL DETAIL 1:5

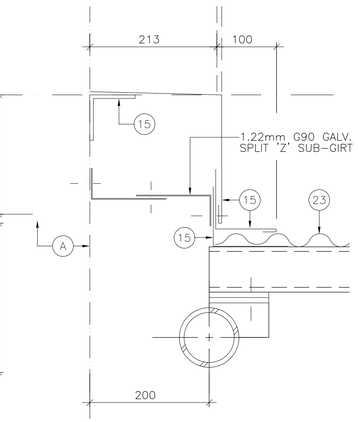

5 / A114 DETAIL 1:5

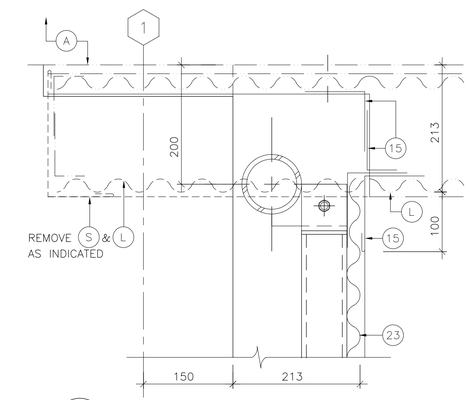

4 / A114 PLAN SECTION 1:5

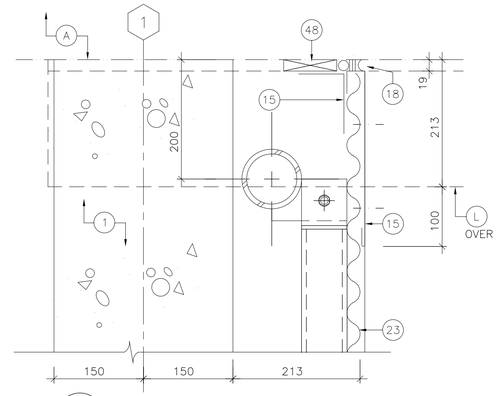

3 / A114 PLAN SECTION 1:5

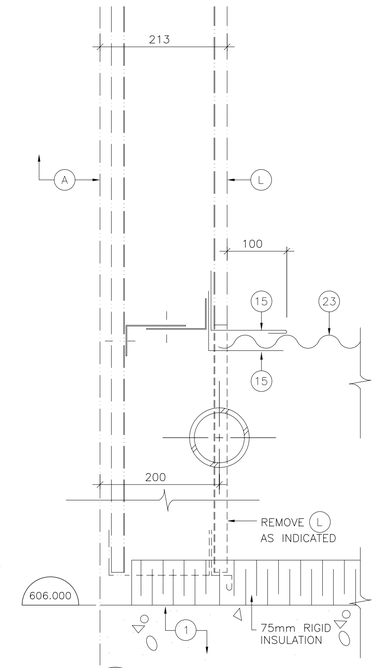

6 / A114 DETAIL 1:5

NOTE REFERENCES

EXISTING CONSTRUCTION

- (A) CONCRETE
- (B) SANDBLASTED CONCRETE
- (L) INSULATED PREFINISHED CORRUGATED STEEL CLADDING SYSTEM
- (S) PREFINISHED STEEL FLASHING

NEW CONSTRUCTION

- (1) CONCRETE
- (2) SANDBLASTED CONCRETE
- (4) 190mm CONC. BLOCK
- (15) PREFINISHED STEEL FLASHING (BY CLADDING SUPPLIER)
- (16) CONTINUOUS NEOPRENE CELL CLOSER (BY CLADDING SUPPLIER)
- (17) 64mm CONCRETE WEARING SLAB ON 6MIL. POLYURETHANE SLIP SHEET ON 75mm RIGID INSULATION
- (18) CAULKING & BACK-UP ROD (BY CLADDING SUPPLIER)
- (20) 2 PLY SBS ROOFING
- (23) PREFINISHED CORRUGATED STEEL CLADDING ON STRUCTURAL STEEL SUPPORT FRAMING
- (23A) PREFINISHED CORRUGATED STEEL CLADDING ON 1.22mm G90 GALV. SPLIT 'Z' SUB-GIRTS
- (33) 19 x 19mm RUSTICATION (TO MATCH EXISTING)
- (39) CONTINUOUS 25 x 3mm FLAT BAR (BY ROOFING CONTRACTOR)
- (48) CONTINUOUS TREATED WOOD BLOCKING
- (54) 19mm BITUMEN IMPREGNATED FIBREBOARD JOINT FILLER

TOBY RUSSELL BUCKWELL & partners architects
1650 ALBERNI STREET, VANCOUVER, B.C.
CANADA, V6G 1B1. TEL.: [604] 682-6881
FAX: [604] 682-3081

ACAD DWG. A114 1:5 96-04-24

AutoCAD DRAWING

REVISIONS

ISSUE	DATE	DRAWN	CHK'D	APP'D	DESCRIPTION	ISSUE	DATE	DRAWN	CHK'D	APP'D	DESCRIPTION
B	FEB/96	D.K.			RE-ISSUED FOR ADDENDUM						
C	APR/96	ES	C.O.	C.O.	ISSUED FOR CONSTRUCTION						

DESIGNED D.K.M.
DRAWN B.D.C.
CHECKED C.O.

DAYTON & KNIGHT LTD.
Consulting Engineers

RESORT MUNICIPALITY OF WHISTLER
WASTEWATER TREATMENT PLANT-STAGE III EXPANSION - CONTRACT 1
HEADWORKS & PRIMARY SED. TANKS
DETAILS - SHEET 5

SCALE: 1:5 — A114/A214

DRAWING No. 179.11.1
SHEET 55 OF 249 ISSUE C