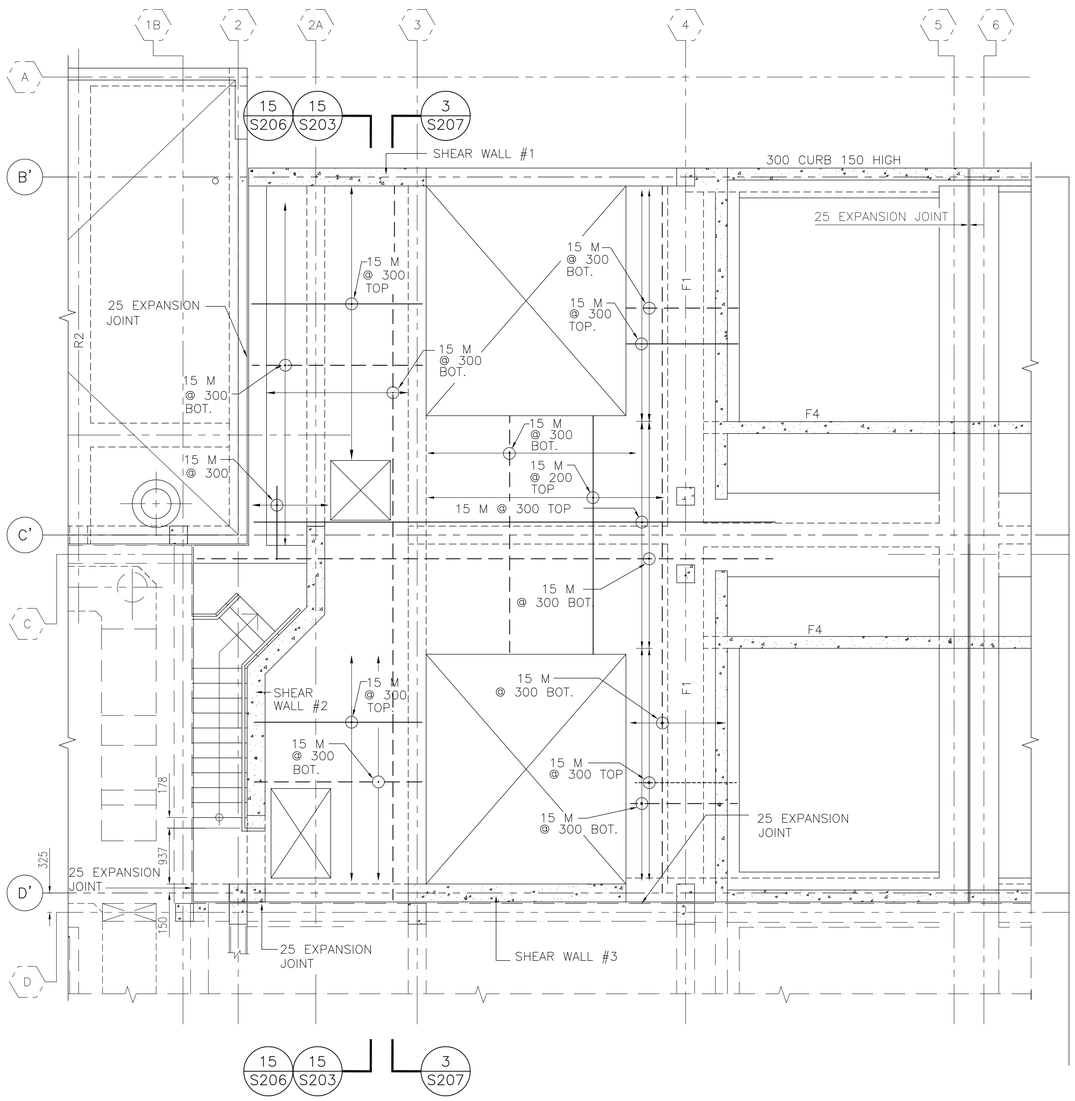

PLAN @ ELEV. 606.000
1:50

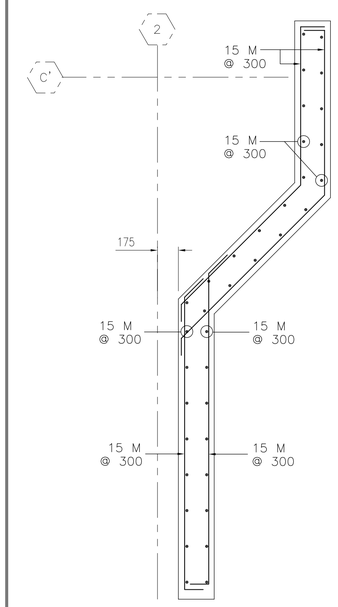

PLAN SECTION
SHEAR WALL #2
1:25

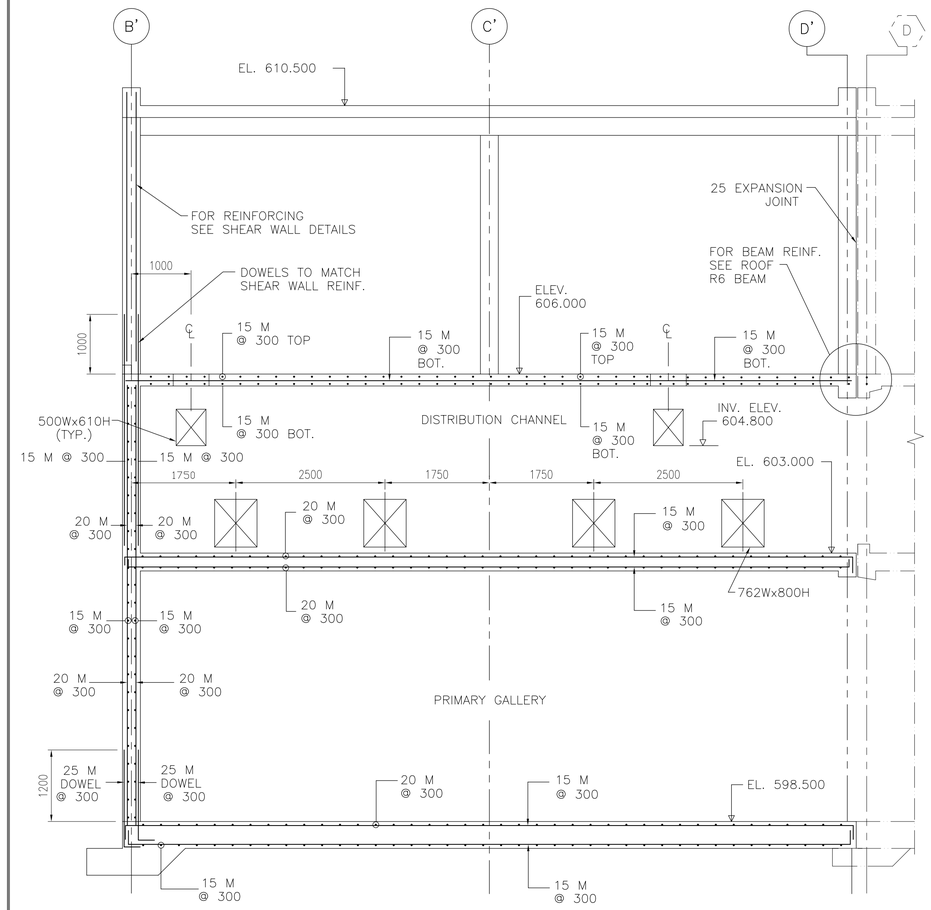

SECTION 3/S207
1:50

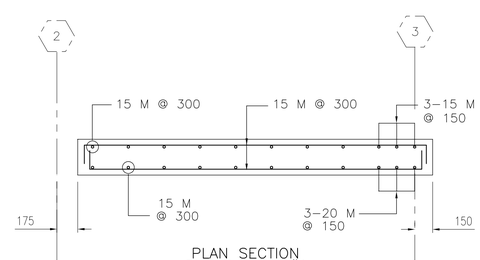

PLAN SECTION
SHEAR WALL #1
1:25

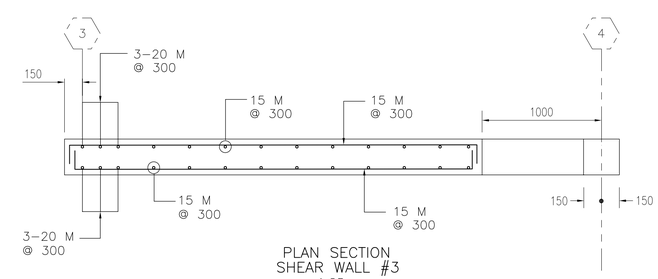

PLAN SECTION
SHEAR WALL #3
1:25

ACAD DWG. S207 1:50 98-01-26

AutoCAD DRAWING REVISIONS	ISSUE	DATE	DRAWN	CHK'D	APP'D	DESCRIPTION	ISSUE	DATE	DRAWN	CHK'D	APP'D	DESCRIPTION
	B	APR/96	DBC	S.O.	S.O.	ISSUED FOR CONSTRUCTION						
	C	JAN/98	JC			RECORD DRAWING						

DESIGNED S.O.
DRAWN AEW/KM
CHECKED H.K.

DAYTON & KNIGHT LTD.
Consulting Engineers

RESORT MUNICIPALITY OF WHISTLER
WASTEWATER TREATMENT PLANT–STAGE III EXPANSION–CONTRACT 1
PRIMARY SED.TANKS–PLAN @ ELEV. 606.000–REINFORCING

SCALE: 1:50
S207
DRAWING No. 179.11.1
SHEET 81 OF 249 ISSUE C