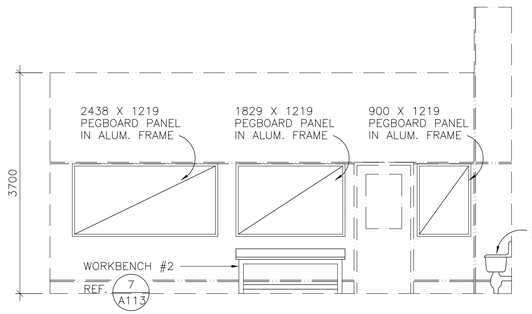

1 A101 MAINTENANCE WORKSHOP 115
1:50

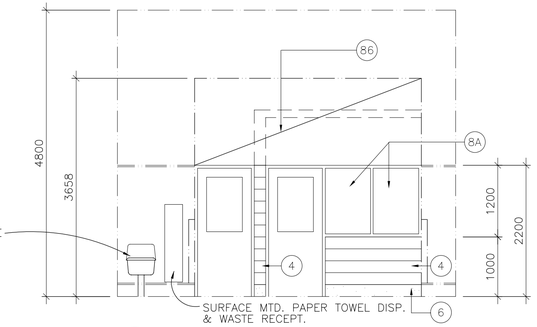

2 A101 MAINTENANCE WORKSHOP 115
1:50

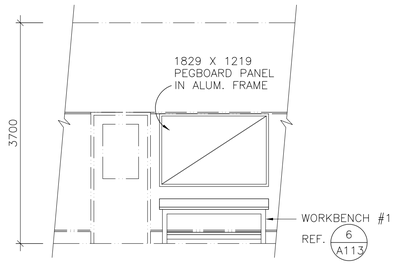

3 A101 EXISTING STORAGE ROOM 114
1:50

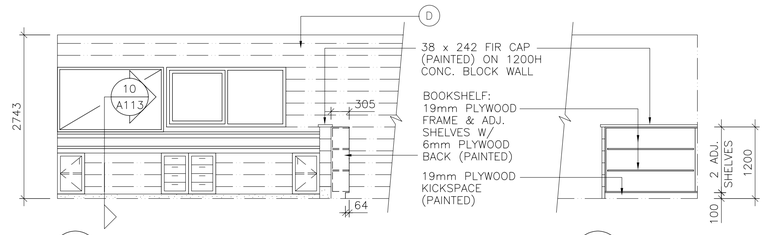

4 A101 OFFICE/ELECTRICAL WORKSHOP 116
1:50

5 A101

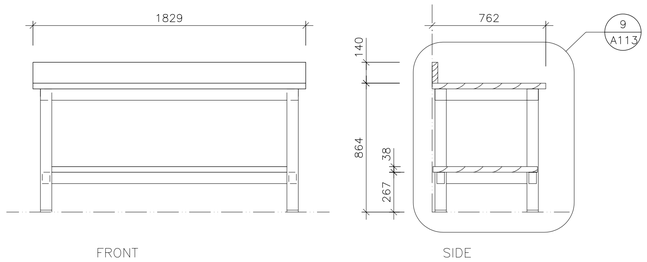

6 A113 WORKBENCH #1
1:20

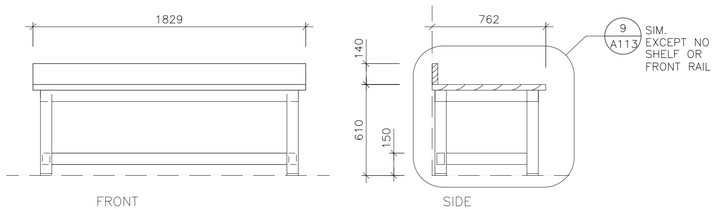

7 A113 WORKBENCH #2
1:20

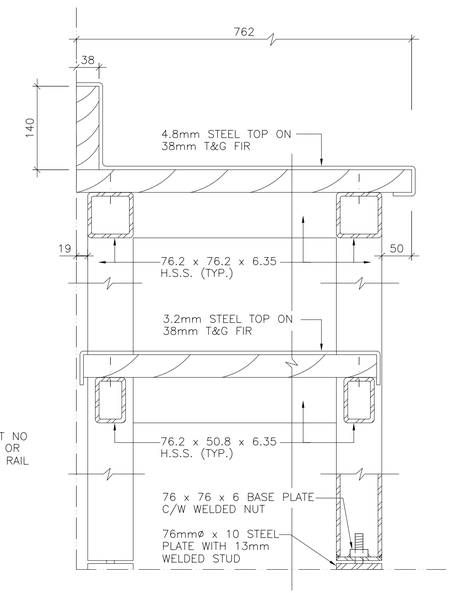

9 A113 WORKBENCH DETAIL
1:5

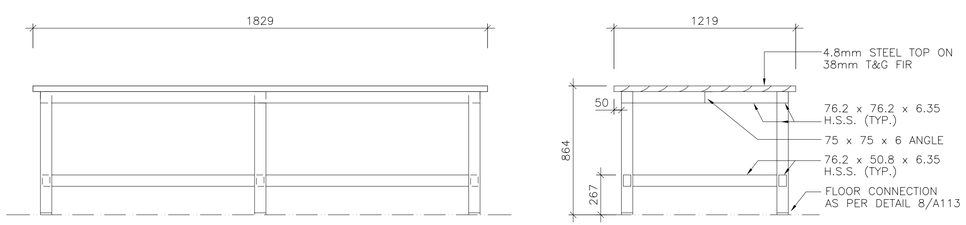

8 A101 WORKBENCH #3
1:20

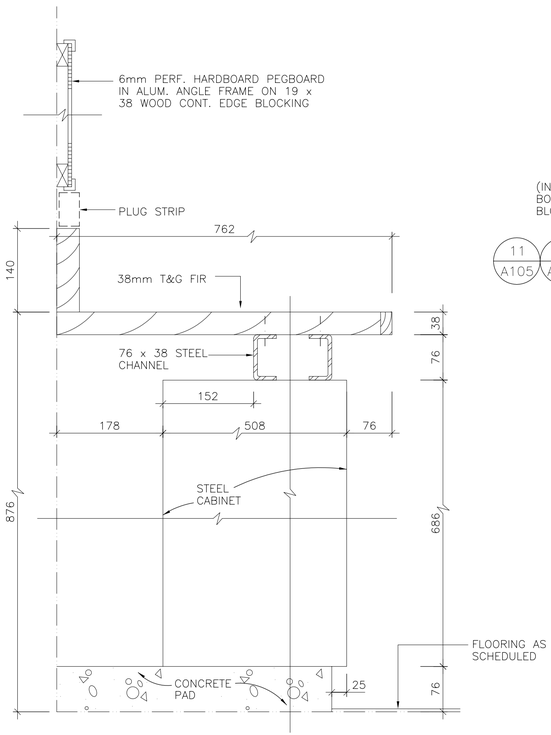

10 A113 DETAIL
1:5

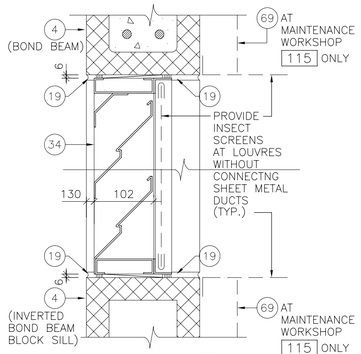

11 A105 11 A206 11 A207 LOUVRE DETAIL @ CONC. BLOCK
1:5

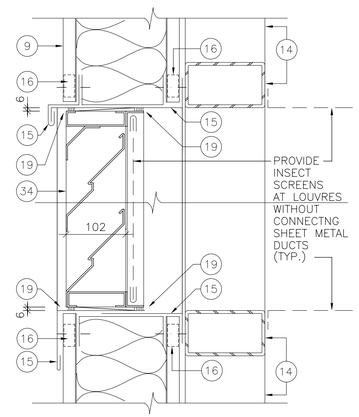

12 A105 LOUVRE DETAIL @ STEEL CLADDING SYSTEM
1:5

NOTE REFERENCES:

EXISTING CONSTRUCTION

- (D) 190 CONCRETE BLOCK

NEW CONSTRUCTION

- (4) 190mm CONC.BLOCK
- (6) 200H x 190W CONC.CURB
- (8A) SINGLE 6mm FLOAT GLASS IN 146 x 50mm STEEL FRAMES
- (9) INSULATED PREFINISHED CORRUGATED STEEL CLADDING SYSTEM (TO MATCH EXISTING)
- (14) 127 x 76.2 H.S.S. GIRT/POST
- (15) PREFINISHED STEEL FLASHING (BY CLADDING SUPPLIER)
- (16) CONTINUOUS NEOPRENE CELL CLOSER (BY CLADDING SUPPLIER)
- (19) CAULKING AND BACK-UP ROD (BY GENERAL CONTRACTOR)
- (34) ALUM. WEATHER LOUVRE (PAINT TO MATCH CLADDING)
- (69) 13mm GYPSUM BOARD ON 'THERMAL-STUD' CHANNELS @ MAX 610mm O.C. ON 50mm RIGID INSULATION ON CONC. OR 190mm CONC. BLOCK (FULL HT. TO U/S STRUCTURE)
- (86) 16mm GYPSUM BOARD ON 64mm STEEL STUDS @ 406mm O.C.

TOBY RUSSELL BUCKWELL
& partners architects
1650 ALBERNI STREET, VANCOUVER, B.C.
CANADA, V6G 1B1. TEL.: [604] 682-6881
FAX: [604] 682-3081

ACAD DWG. A113 1:50 96-04-24

AutoCAD DRAWING

REVISIONS

ISSUE	DATE	DRAWN	CHK'D	APP'D	DESCRIPTION	ISSUE	DATE	DRAWN	CHK'D	APP'D	DESCRIPTION
B	APR/96	E.S.	C.O.	C.O.	ISSUED FOR CONSTRUCTION						

DESIGNED D.K.M.
DRAWN B.D.C.
CHECKED C.O.

DAYTON & KNIGHT LTD.
Consulting Engineers

RESORT MUNICIPALITY OF WHISTLER
WASTEWATER TREATMENT PLANT-STAGE III EXPANSION - CONTRACT 1
HEADWORKS & PRIMARY SED. TANKS
INTERIOR WALL ELEVATIONS & MILLWORK DETAILS

SCALE: 1:50
A113/A213
DRAWING No. 179.11.1
SHEET 54 OF 249 ISSUE B