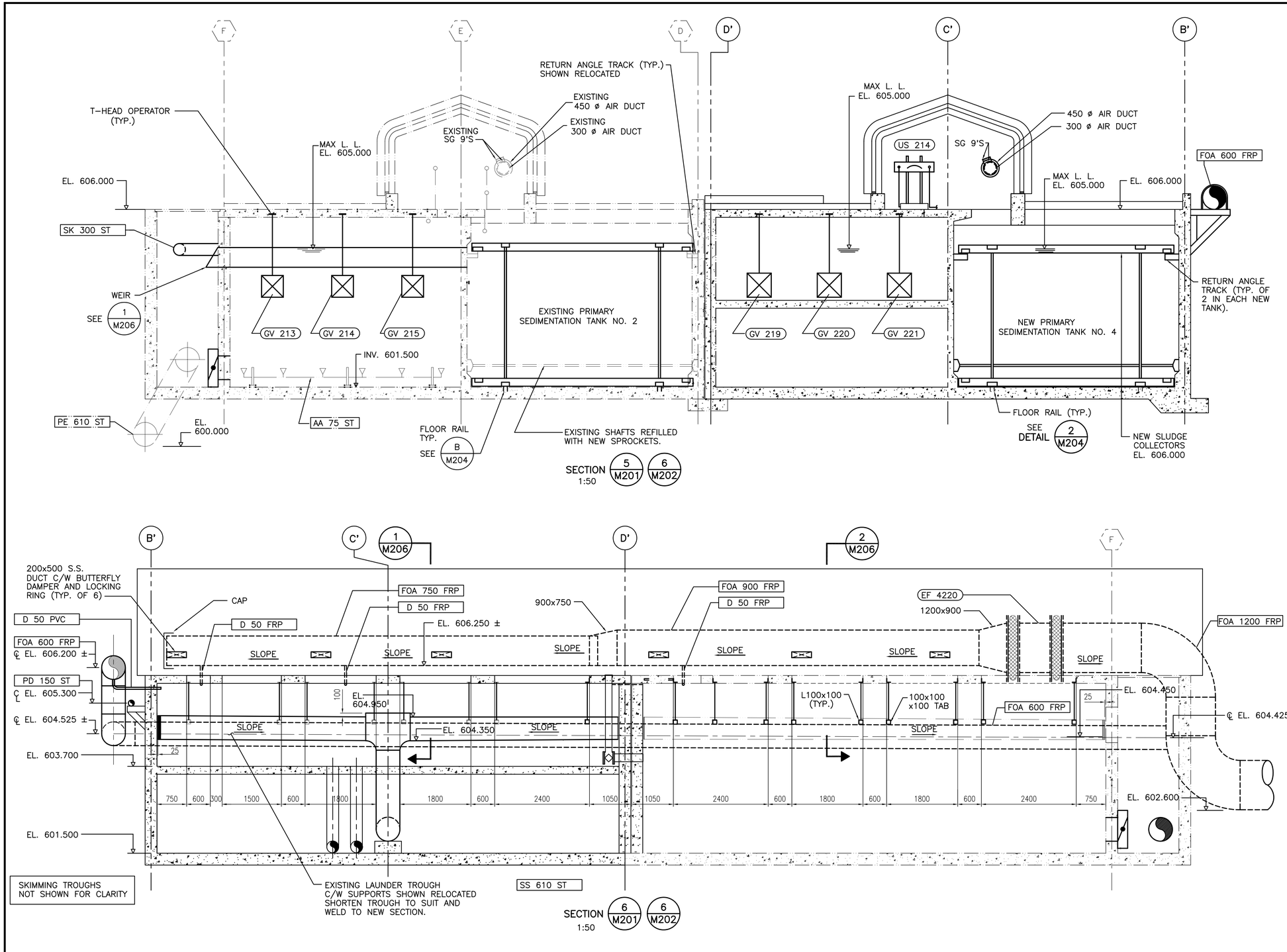

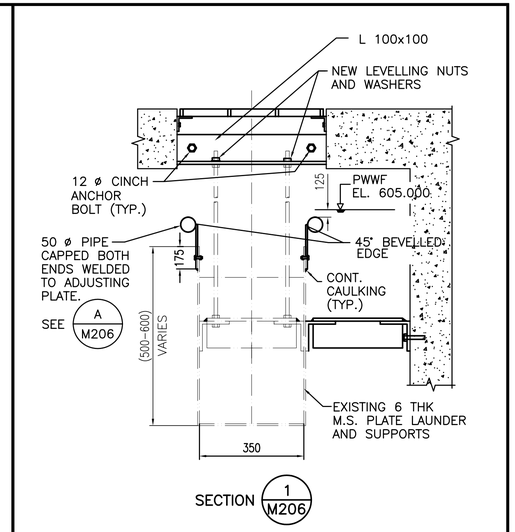

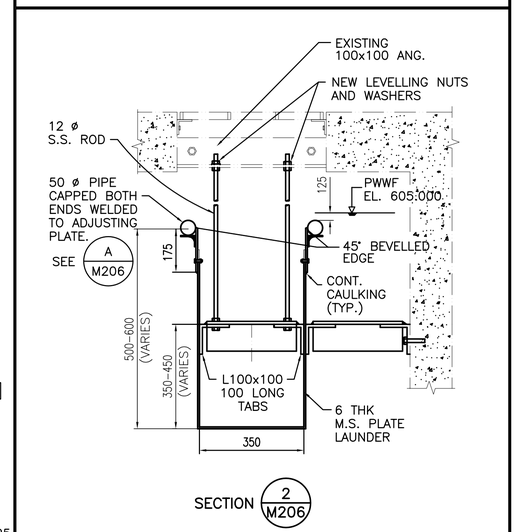

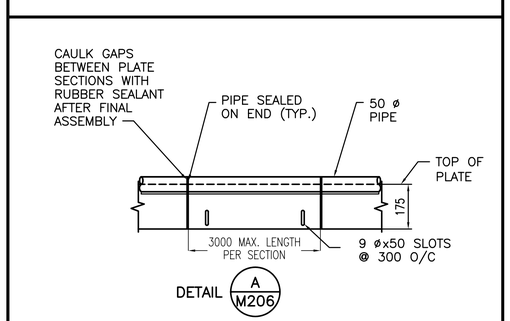

ACAD DWG. M206 1:50 98-02-18

REVISIONS	ISSUE	DATE	DRAWN	CHK'D	APP'D	DESCRIPTION	ISSUE	DATE	DRAWN	CHK'D	APP'D	DESCRIPTION
	B	APR/96	LW	HK	HK	ISSUED FOR CONSTRUCTION						
						(INCLUDES ADDENDA ITEMS)						
	C	FEB/98	JC			RECORD DRAWING						

AutoCAD DRAWING

DESIGNED H.P.W.
DRAWN WSL/KM/DK/ES
CHECKED HK

DAYTON & KNIGHT LTD.
Consulting Engineers

RESORT MUNICIPALITY OF WHISTLER
WASTEWATER TREATMENT PLANT–STAGE III EXPANSION–CONTRACT 1
PRIMARY SEDIMENTATION TANKS – SECTIONS

SCALE: 1:50 M206
DRAWING No. 179.11.1
SHEET 130 OF 249 ISSUE C